Leybold

High Vacuum Pumps

TURBOVAC / TURBOVAC MAG
Turbomolecular Pumps

Contents

High Vacuum Pumps

Cryogenics

Accessories

Cryo Pumps / Cryogenics

General to TURBOVAC Pumps

Turbomolecular vacuum pumps (TURBOVAC) are used in applications which require a clean high or ultrahigh vacuum like, for example, in research, development or in industrial fields like the semiconductor industry, analytical instrumentation or coating technology.

Principle of Operation

In principle, the turbomolecular pump is a turbine rapidly revolving in a housing where the rotor stages of the turbine are equipped with a number of rotor blades. Located between the rotating rotor blades are stationary stator disks with blades arranged in the opposite direction. By means of a momentum transfer from the rotating rotor blades to the gas molecules their initially non-directional thermal motion is changed in to a directional motion from the inlet flange of the pump in the axial direction towards the forevacuum flange. In the molecular flow range (i.e. at pressures below 10^{-3} mbar (0.75×10^{-3} Torr)) the mean free path of the gas molecules is larger then the spacing between the rotor and the stator blades (typically a few tenths of a millimetre). Correspondingly the molecules chiefly collide with the optically dense rotor blades, resulting in a highly efficient pumping action. In the laminar flow range (i.e. at pressures over 10^{-1} mbar (0.75×10^{-1} Torr)) the effect of the rotor is impaired by frequent collisions between molecules themselves. For this reason, a turbomolecular pump is not capable of pumping gases at atmospheric pressure.

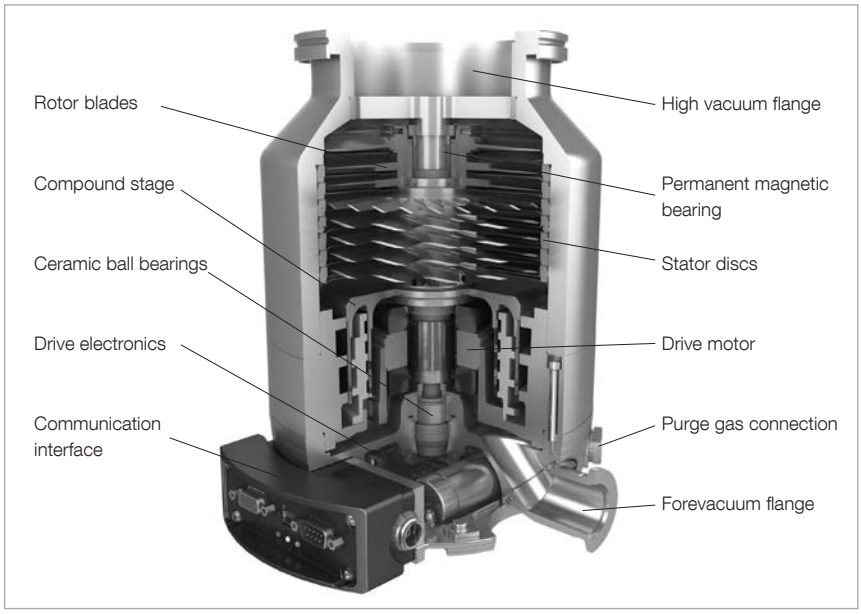

Sectional drawing of a turbomolecular pump (TURBOVAC i)

Rotor Bearing

Leybold offers different rotor bearing systems. A purely classic mechanical type of rotor bearing (TURBOVAC) or a magnetic rotor bearing (TURBOVAC MAG) and also a hybrid bearing (TURBOVAC i / iX) where the bearing on the forevacuum side is a ceramic ball bearing lubricated for life and where the bearing on the high vacuum side is implemented by way of a non-wearing magnetic bearing. Typical for all these types of bearing is that they do not require any lubricating oil which under circumstances like standstill of the pump might diffuse back into the vacuum chamber due to the lack of any pumping action.

Drive Electronics/Control Unit

Driving and monitoring the turbomolecular pump requires an electronic frequency converter (inverter). The frequency converter delivers the driving voltage and the output frequency for the motor and also automatically monitors the system. Optimum running up of the pump rotor is attained by a steadily increasing voltage and frequency feed. After attaining the nominal speed, the start-up current is reduced in a controlled manner to the level necessary for normal operation.

The frequency converter and the motor of the TURBOVAC have been designed for a minimal drop of speed even at high intake pressures. This ensures the highest possible gas throughput also in the transition range from molecular to viscous flow

Depending on the given system and installation conditions, the control unit may be supplemented by a comprehensive range of optional accessories facilitating easy integration within existing installations.

Forevacuum Pump

Since turbomolecular pumps are not capable of compressing directly against atmospheric pressure their operation will always require a sufficiently rated forevacuum pump. For the classic rotor arrangement with rotor blades, generally two-stage rotary vane pumps (TRIVAC) will be suitable. In some cases also single-stage rotary vane vacuum pumps (SOGEVAC BI) or scroll vacuum pumps (SCROLLVAC).In the case of the wide range variant where the rotor is equipped with an additional compression stage (compound stage) also diaphragm vacuum pumps (DIVAC) may be used.

Characteristic Quantities

Pumping speed (volume flow rate)

The pumping speed “S” is the conveyed volume flow through the intake opening of the pump. It is dependent on the type of gas so that for this reason the nominal pumping speed, i.e. the maximum attainable pumping speed of the pump is commonly stated for air, respectively nitrogen. In the field of high vacuum engineering it is common to state the pumping speed in the unit of measurement [l/s]. The pumping speed is a nonlinear function of the inlet pressure $S = S(p_1)$.

Gas throughput

Gas throughput “Q”, unit of measurement [mbar x l/s] is linked to the pumping speed through the inlet pressure.
$Q = Q(p_1) = p_1 \times S(p_1)$.

Compression

Compression “K” is defined as the ratio between the pressure on the forevacuum side of the turbomolecular pump and the pressure on the high vacuum side.
$K = K(p_{VV}) = p_{VV}/p_{HV}$.
Compression is dependent on the type of gas.

Ultimate pressure (base pressure)

The ultimate pressure “p_{ult}” of a turbomolecular pump which can be baked out is defined through the ratio between forevacuum pressure and compression ratio which is attained in a test chamber 48 hours after a 24-hour bake-out (degassing) of the measurement arrangement.
$p_{ult} = p_{FV}/K_0$.

The maximum attainable ultimate pressure depends among other things on the cleanness of the apparatus, the type of forevacuum pump used, the types of seals used for the high vacuum flange and the bake-out conditions.

TURBOVAC Product Line

The TURBOVAC pumps are turbomolecular pumps with mechanical rotor suspension which are used in the pressure range from 10^{-1} mbar (0.75×10^{-1} Torr) to 10^{-10} mbar (0.75×10^{-10} Torr) Pumping speeds for air vary from 35 l/s (inlet flange diameter = 40 mm (1.57 in.)) to 1,150 l/s (inlet flange diameter = 250 mm (9.84 in.)).
Besides a variant with extremely reliable ceramic ball bearings on the forevacuum and the high vacuum side, Leybold also offers a line of turbomolecular pumps equipped with hybrid bearings which on the forevacuum side are equipped with a ceramic ball bearing and on the high vacuum side with a permanent magnetic bearing (TURBOVAC i line).

Owing to their compact design and ease of operation, these pump lines are used in all high vacuum and ultrahigh vacuum fields of application. In particular, the TURBOVAC pumps are running very successfully in mass spectrometers, in CD, DVD and hard disk production units, in the manufacture of large area optical coatings, in non-corrosive semiconductor production processes and in laboratories as well as research institutes

The most important advantages of the TURBOVAC product line are:

- Oil-free pumps for the generation of clean high and ultra-high vacuum conditions
- Highest performance in any orientation
- Highest degree of operating reliability
- Easy to operate
- Compact design

TURBOVAC (T) 350 iX

TURBOVAC MAG Product Line

The TURBOVAC MAG pumps are turbomolecular pumps with magnetic rotor suspension which are used in the pressure range from 10^{-1} mbar (0.75×10^{-1} Torr) to 10^{-10} mbar (0.75×10^{-10} Torr). Pumping speeds for air vary from 300 l/s (inlet flange diameter = 100 mm (3.94 in.)) to 2,200 l/s (inlet flange diameter = 250 mm (12.6 in.)).
The TURBOVAC MAG pumps are mostly installed in areas that require noise-free and vibration-free operation, have to be free of hydrocarbons and require long maintenance intervals. Electron beam microscopy, analytical technology and R & D are also important areas of application for these pumps.

The most important advantages of the TURBOVAC MAG product line are:

- Hydrocarbon-free pumps for the generation of clean high and ultra-high vacuum conditions
- High performance in any orientation
- High degree of operating reliability
- Extremely low vibration
- Almost maintenance-free

TURBOVAC MAG 2200 iPL

Use of Turbomolecular Pumps in Analytical Instruments

All modern analytical methods for gas, liquid and plasma analysis – like for example GC-MS, LC-MS and ICP-MS – rely on mass spectrometers and for this reason require adequate high vacuum conditions. Also in electron microscopes and many surface analysis instruments the production of a high vacuum is essential. In over 90% of all high vacuum applications, the turbomolecular pump has been found to be ideal. Thanks to the hydrocarbon-free vacuum, most simple operation, compact design and almost maintenance-free operation it has in most cases displaced above all the diffusion pump.

On the basis of decades of experience and in cooperation with research facilities and the manufacturers of analytical instruments, Leybold has continually optimized its products.

TURBOVAC MAG W 600 iP

Through the TURBOVAC wide range series, a further improvement has been attained, making available to users in the area of analytical engineering highly flexible and reliable products.

Owing to the modular concept the user may adapt the vacuum system precisely to his requirements. The components can be integrated perfectly and thus find the most cost-effective system configuration. Through the introduction of the TURBOVAC multi inlet series, Leybold has, based on special customer requirements, achieved a major step ahead for analytical instruments.

Two or more analysis chambers can be pumped down simultaneously by a single multi-inlet pump. These pumps have been tailored for pumping speed and gas throughput in order to attain a higher detection sensitivity of analytical systems, for a smaller footprint and an increased sample throughput, for example. The benefits for the customers are the extreme compactness of the vacuum systems without sacrificing performance density, simple installation, stable vacuum connections and, compared to the use of discrete individual pumps, significantly lower investment costs for the entire system. The cartridge solution, moreover, allows for an innovative and cost-effective design of the customer's system and during servicing a simple replacement of the active unit without involved assembly work and leak searching.

Cartridge benefits, which convince

- Higher effective pumping speed
- No losses in conductance
- Compact vacuum system
- Easy pump replacement without having to disassemble the highly sensitive mass spectrometer chambers

The benefits for the customers are reflected by the efficiency of the analytical instruments:

- Increase in detection sensitivity
- Smaller analytical systems
- Increase in sample throughput
- Reduction of system costs
- Lower maintenance costs

In combination with backing pumps like the SOGEVAC, TRIVAC or SCROLLVAC, Leybold is able to offer the best vacuum system optimized for all major applications in the area of analytical instrumentation.

TURBOVAC i Multi Inlet

Use of Turbomolecular Pumps in the Area of Coating Systems

Coating of optical and magnetic storage media, optical components as well as architectural glass requires high vacuum conditions. This is the only way to ensure that the formed layers will be uniform and adhere to the substrate.

The way in which the vacuum is generated has a significant impact on the quality of the coating. By pumping the vacuum chamber down to pressures in the range of 10^{-6} mbar (0.75 x 10^{-6} Torr), interfering gas and water molecules are removed from the processing chamber. In the case of sputtering the coating process is run in the pressure range between 10^{-3} and 10^{-2} mbar (0.75 x 10^{-3} and 0.75 x 10^{-2} Torr), and in the case of evaporation coating, pressures below 10^{-4} mbar (0.75 x 10^{-4} Torr) are utilized.

The turbomolecular pump meets all requirements of the customers as to a hydrocarbon-free vacuum, very simple operation, compact design and almost maintenance-free operation in an almost ideal manner. The range of pumps from Leybold includes pumps with flange diameters ranging from 40 mm to 250 mm (1.57 in. to 9.84 in.) nominal width.

Thus the right pump is available for each application, be it coating of data memories (CD, DVD, hard discs), coating of tools and coating of precision lenses in the area of optical components, displays or architectural glass.

Coating of architectural glas

Use of turbomolecular pumps in research and development

In many applications in which new ideas shall be transformed into technical processes, vacuum technology is a basic requirement for being able to implement these processes at all.

In the field of research and development, all types of turbomolecular pumps from Leybold are being used. Since the application requirements differ widely, for example are being used. Since the application requirements differ widely, for example between university basic research, industrial development, in research and in large laboratories, the right component or the matching system can be put together from the comprehensive range of equipment being offered.

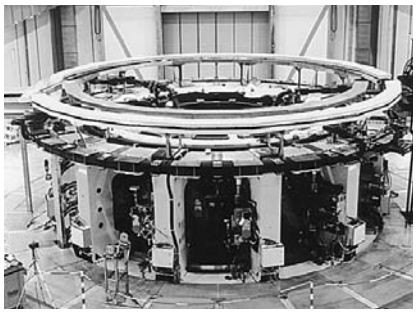

Nuclear fusion technology

Notes

Applications for TURBOVAC Pumps

Pumps / Applications	TURBOVAC 90 i, (T) 250/350/450 i	TURBOVAC 90 iX, (T) 250/350/450 iX	TURBOVAC i Multi Inlet	MAG W 300/400/600/700 iP	MAG W 1300/1600/1700/2200 iP(L)	MAG 1601/2201 iP(L)	MAG W 300/400/600/700 P
Analytical Instruments							
Leak detectors	■			■	■		■
Mass spectrometers	■		■	■	■		■
Gas chromatography (GC-MS)	■		■	■	■		■
Liquid chromatography (LC-MS)	■		■	■	■		■
Quadrupol time of flight (Q-TOF)	■		■	■	■		■
Matrix assisted laser desorption time of flight (MALDI-TOF)	■		■	■	■		■
Inductively coupled plasma mass spectrometry (ICP-MS)	■		■	■	■		■
Electron beam microscopy	■	■		■	■		■
Coating							
Data storage / optical	■	■		■	■	■	■
Data storage / magnetic	■	■		■	■	■	■
Flat panel displays				■	■	■	■
Optical coating	■	■		■	■	■	■
Large area coating					■	■	
Decorative coating	■				■	■	
Metallization	■				■	■	
Wear protection					■	■	
Metallurgy					■	■	
R & D (Research and Development)							
Surface analysis	■			■	■		■
UHV / XHV systems	■	■		■	■		■
Particle accelerators				■	■		■
Fusion experiments				■	■		■
Space simulation				■	■		■
Semiconductor Processes							
Load locks and transfer chambers	■	■		■	■	■	■
PECVD				■	■	■	■
PVD	■			■	■	■	■
Ion implantation				■			■

Accessories for TURBOVAC Pumps

Pumps / Accessories	TURBOVAC 90 i, (T) 250/350/450 i	TURBOVAC 90 iX, (T) 250/350/450 iX	TURBOVAC i Multi Inlet	MAG W 300/400/600/700 iP	MAG W 1300/1600/1700/2200 iP(L)	MAG 1601/2201 iP(L)	MAG W 300/400/600/700 P
Integrated Frequency Converter	■	■	■	■	■	■	
External Frequency Converter and Power Supply							■
24VDC Display Unit TURBO.CONTROL i	■	■					
Pump control unit with Power Supply TURBO.CONTROL 300	■	■					
Power Supply	■	■	■	■			
Mounting Kit	■	■	■				
Inlet screen / Splinter guard	■	■	■	■	■	■	■
Vibration absorber	■	■	■	■			■
Air cooling unit	■	■	■	■			■
Water cooling kit	■	■	■	■			■
Flange heaters for CF flanges	■	■	■	■			■
Venting valve	■	■		■			■
Purge gas valve	■	■	■	■	■	■	■
Purge gas and venting valve					■	■	
Power failure venting valve	■	■	■	■	■	■	■
Electronic brake module				■			■
Relay box	■	■	■				
Accessories for serial interfaces	■	■	■	■	■	■	■
Control Software for TURBOVAC	■	■	■	■	■	■	■

General to TURBOVAC i / iX Pumps

Turbomolecular Pumps with Hybrid Rotor Suspension (mechanical/magnetic)

TURBOVAC i, iX / T i, T iX

The TURBOVAC i / iX series is a modular line of turbomolecular vacuum pumps. With the integrated drive electronics (frequency converter) it forms a single unit.
In the development of the TURBOVAC i / iX special emphasis was placed on the maximum attainable pump performance in consideration of its footprint. The specially developed rotor/stator design, upon request with an additional compression stage, guarantees excellent performance data as to pumping speed, gas throughput and compression especially also for light gases.
In all pumps of this line, the bearing consists of a non-wearing permanent magnetic bearing on the high vacuum side and an oil-free ceramic ball bearing which is lubricated for life on the forevacuum side. For this reason, the usually required standard maintenance involving an oil change is no longer necessary.Th ec eramic ball bearing is replaceable on-site, should this be required.
The pumps are equipped as standard with a venting and purge gas facility for directly connecting a venting valve, purge gas valve or purge gas throttle to the pump.

Owing to the many possible combinations (electronics, pump stage design, housing and the range of accessories) the TURBOVAC i / iX can be flexibly adapted to the specific application in each case.
For example, in comparison with the TURBOVAC i, the TURBOVAC iX is equipped with an integrated vacuum system control unit which drives accessory components like vacuum gauge, valves, fans and forevacuum pumps. Moreover, numerous optionally available communication interfaces facilitate easy integration within your installation.
The pump stage design (rotor, stator and Holweck stage) can be selected specifically in consideration of the respective process requirements and offers variants for highest possible gas throughput, pumping speed and/or compression in single or multi-chamber systems. Equally comprehensive is the range of housing and flange variants being offered where the vacuum connections can be adapted flexibly to the on-site installation conditions. The comprehensive range of accessories completes the TURBOVAC i / iX line thereby extending the fields of application for these pumps.

Advantages to the User

- High pumping performance from a compact size
- Cost-effective price-to-performance ratio
- Highly reliable, maintenance-free bearing concept without oil lubrication
- Owing to the overall modular concept, individually adaptable to the respective conditions and requirements
- Variety of housings and flange options
- Easy and easily adaptable installation, any mounting position
- Easy process integration due to the numerous interfacing options
- Flexible accessory options (power supply, cooling, heating, venting, installation etc.)

Overview of Variants

Electronics Variants

All pumps are equipped with integrated drive electronics with a 24 V/48 V power supply which controls the amount of drive power and which monitors all pump functions.

The individual requirements with regard to communication interfaces and the functional scope of the driving options for accessory components can be covered through a number of different electronics variants.

Left: TURBOVAC i with standard interface
Centre: **TURBOVAC i** with Anybus interface extension
Right: **TURBOVAC iX** with integrated vacuum system control unit and Anybus interface extension

Electronics Variants

TURBOVAC i (Standard)
Cost-effective solution equipped with basic functions and interfaces.

- Internal 24/48 V DC frequency converter
- Status LEDs
- Accessory connection for up to 2 controllable accessory components
- User-friendly interfaces (USB, RS 485, 15-pin digital I/O)

Standard interface USB, RS 485 and 15-pin digital I/O for TURBOVAC i

TURBOVAC i (Anybus interface extension)

Features like TURBOVAC I, additionally:

- User-friendly interfaces (USB, 15-pin digital I/O) and Anybus interface instead of the RS 485 for further interface options: RS 232, Profibus, Ethernet/IP (further interfaces upon request)

Anybus interface expansion for TURBOVAC i

TURBOVAC iX (Vacuum system control unit)
With integrated vacuum system control unit and Anybus interface extension.

Features like TURBOVAC i (Anybus interface extension), additionally:

- 3 outputs for controlling vacuum pump accessories
- 1 vacuum gauge head connection for powering and data recording of vacuum gauge heads and application of pressure data for pump system control
- Flexibly programmable software, for customising the configuration of the control connections

Integrated vacuum system control unit of the TURBOVAC iX

Performance Variants

TURBOVAC i, iX

The standard variant for UHV applications and compact pump system solutions. Owing to the additional Holweck compression stage it delivers a high pumping speed and a high compression especially for light gases, and due to its high forevacuum tolerance it is suited for operation in connection with diaphragm or scroll forevacuum pumps.

TURBOVAC T i, T iX

The “T” version with its classic rotor design without additional compression stage is suited for deployment under more stringent process conditions and high gas loads. Compared to the standard variant it stands for faster run-up times, increased gas throughput and an improved tolerance with regard to pumping of particle or dust containing media.

TURBOVAC i Multi-Inlet

The variant with a special rotor design and two or more inlets as an efficient and compact vacuum solution for multi-chamber systems. It allows for a high degree of system integration and convinces compared to systems with discreet turbomolecular pumps through its lower weight and smaller footprint as well as an increased reliability of the entire vacuum system through the reliance on fewer components compared to similar systems equipped with discrete turbomolecular pumps.

Housing and Flange Variants

The optimised rotor geometry has been specially adapted to the industrial standard sizes for maximum pump performance. Housings with ISO-K as well as CF flanges are available. Moreover, the standard housings with an additional inlet stage are available upon request.

Multiple inlet stages can be implemented through the **TURBOVAC Multi-Inlet**. Here in addition to the special cartridge solution which facilitates easy replacement in the field, also custom housing and chamber solutions are offered for utmost system integration.

Flexibility

The forevacuum connection on all pumps is rotatable thereby facilitating flexible installation within existing systems making optimum use of the available space. Moreover, the required amount of installation space may be reduced by a detachable cable connected interface module

Left: TURBOVAC i with radial forevacuum flange
Right: TURBOVAC i with axial forevacuum flange

Accessories for TURBOVAC i, iX / T i, T iX

Power Supply TURBO.POWER integra

- Plug-and-play power supply for fitting underneath the pump, 100-240 V
  - for TURBOVAC (T) 350 i(X) and TURBOVAC (T) 450 i(X) only
- Including short connecting cable to the pump
- Also for benchtop placement (TURBOVAC 90/250/350/450) with optional extension cable (1, 3, 5 m (3.5, 10.5, 17.5 ft))
- Requires a country-specific mains cord (EU, US, UK …)

24VDC Display Unit TURBO.CONTROL i

- Control and monitoring of a TURBOVAC i/iX pump
- The 24 V/DC operating voltage comes from a plug power supply with round plug (24 V/DC - 1.5A - 36W)
- Can be installed in a rack or mounted in a table housing
- Has two communication channels (RS485 & USB) to the pump control and two interfaces for gauges. An ethernet provides the possibility of running a web server for the pump control and monitoring on an external PC and to read logged data via the TURBOCONTROL i.
- Requires a plug-in power supply an standard cable for communication
- The following measuring gauges can be attached:
  PTR 90, PTR 91 N, TTR 91,
  TTR 91 N, TTR101, TTR 101 N

Pump control unit with Power Supply TURBO.CONTROL 300

- Control unit and power supply for rack installation
- With on/off switch for the turbomolecular pump
- Status LEDs and status relays for monitoring the pump
- For remote control via interface
- Requires a connection cable to the pump (1, 3, 5 m (3.5, 10.5, 17.5 ft)) and country-specific mains cord (EU, US, UK ...)

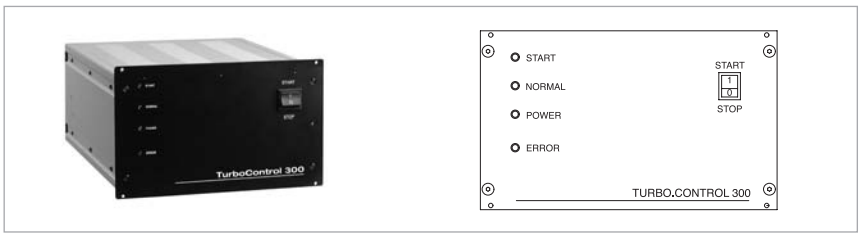

Connecting cables to the pump with bare wire ends of for customer specific power supply units

Relay Box
The relay box allows you to control via the 24 V DC output on the TURBOVAC i a mains powered electric consumer, like a backing pump, for example. Mains power and consumer are connected using mains power cords, the control voltage is connected through an M 8 connector.

- incl. connection cable with a M 8 plug, 2 m (7.0 ft) long

DC Pump Plug
for adapting the supply voltage by the customer.

- 24/48 V DC-In plug TURBOVAC i

Radial air cooler
for lateral installation on the pump, including connection plug

- Flexible positioning

Axial air cooler
For installation underneath the pump, including connection plug

Water cooling
for flexible installation on the pump (required for degassing the turbomolecular pump)

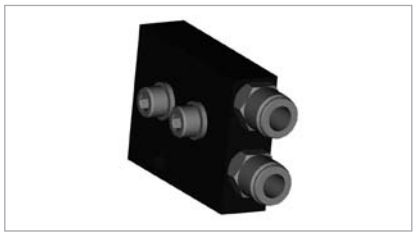

Heating Collar
for degassing the pump

- Degassing temperature 100 °C (212 °F)
- Requires a country-specific mains cord (EU, US, UK …)
- With optional relay box and accessory cable, automatic control via the electronics of the TURBOVAC i / iX is possible

Accessory Valves

- Power supply 24 V DC
- G 1/8" inlet (inside thread) and discharge (outside thread) connection
- Including O-ring and connecting cable with M 8 plug for connection to the accessory input on the TURBOVAC i / iX

Purge Gas Valve (for connection to the purge gas connection on the turbomolecular pump)

for controlling the admitted purge gas quantity

- The valve is closed when no power

Venting Valve (for connection the venting connection)

for venting the turbomolecular pump

- The valve is normally closed

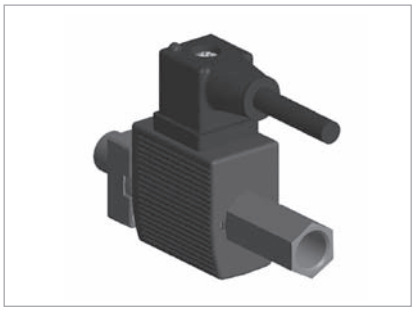

Power Failure Venting Valve (for connection the venting connection)

for venting the turbomolecular pump

- The valve is normally open

Purge Gas Throttle

for passively controlling the admitted purge gas quantity

- G 1/8" inlet (inside thread) and discharge (outside thread) connection
- Purge gas throttle 24 sccm

Air Filter

for connection to the valves or throttles

- Prevents contamination and clogging of valves and throttles
- G1/8"

Y-Splitter

- Extends the M 8 accessory connection on the TURBOVAC i by a further connection for parallel driving of two accessory components.
  Here both accessory components are switched synchronously

Installation and Mounting Accessories

Mounting kit for safe mounting of the pump

The mounting kits include:
ISO-K kit (100 und 160):
centering rings and clamps
ISO-F kit (100 und 160):
collar flange, outside ring, bolts and nuts
CF kit (100 und 160):
2 copper gaskets, bolts, nuts and washers

Mounting kits (left ISO-KF, centre ISO-F, right CF)

Centering Rings with Splinter Guard (DN 100 and 160 ISO-K/F)

Centering Rings with Inlet Screens (DN 100 and 160 ISO-K/F)

Splinter Guards (DN 100 und 160 CF)

Inlet Screens (DN 100 und 160 CF)

for protecting the pump against ingesting parts.

Inlet screen, 3.2 mm (0.01 ft) mesh
Splinter guard, 0.8 mm (0.003 ft) mesh

Note:
For ISO-K/F, both inlet screen and splinter guard have been integrated in the centering ring.

Vibration Absorber (DN 100/160 ISO-K and 100/160 CF)

Prevents any possible vibration transfer from the pump to sensitive instrumentation or apparatus.

Software LEYASSIST *

Software for PC-based communication, control and monitoring of turbomolecular pumps via USB, RS 485 or RS 232 interface with automatic pump detection.

Functions

- Display of vacuum system status
- Trend configuration and report
- Configuring the accessory functions of the TURBOVAC i / iX
- Reading/writing of parameters
- Data logging
- Alarm/warning message logging
- Interface uses USB (with USB cable 2.0, Type A/B, 1.8 m (6.3 ft) long), RS 485 or RS 232 (with dongle)
  - Functions: reading/writing of parameters, control and data acquisition
- Automatic detection of connected Leybold pump type or instrument
- Different languages and with different user access levels are available

* included in delivery of TURBOVAC iX

Ordering Information

Software LEYASSIST for turbomolecular vacuum pumps	**Part. No. 230439V01**

Products

TURBOVAC
with Hybrid Rotor Suspension (mag/mech)

with integrated Frequency Converter
TURBOVAC 90 i, 250 i, (T) 350 i and (T) 450 i

TURBOVAC 90 i (left), 250 i (T), 350 i and (T) 450 i (right)

with integrated Frequency Converter and integrated Vacuum System Controller
TURBOVAC 90 iX, 250 iX, (T) 350 iX and (T) 450 iX

TURBOVAC 90 iX (left), 250 iX, (T) 350 iX and (T) 450 iX (right)

Typical Applications

- Analytical technologies / Research & Development
  - Mass spectrometers
  - Electron microscopes
  - Surface analysis
  - X-ray-analysis
  - Particle accelerators and synchrotons
  - Laboratory coating systems
  - MBE (Molecular Beam Epitaxy)
  - UHV systems
- Life Sciences
  - Proton therapy
  - Gamma sterilisation
  - Production of high quality implants
- Industrial and Coating applications
  - PVD- Physical Vapour deposition
  - Optical coatings
  - CD/DVD/Blu-Ray Disc production
  - Thin film technologies, photovoltaics
- Load locks, transfer chambers, handling systems
- Electron beam welders
- Insulation vacuum and leak detection

Technical Features

TURBOVAC i

- Integrated electronic drive unit with 24/48 V DC supply
- Best in class pumping speed and compression especially for light gases
- Vacuum port design flexibility
- Installation in any orientation
- Superior reliability due to innovative pump and bearing design
- The only maintenance free hybrid mechanical TMP
  - no need for oil changes
- On-site maintenance possibility (bearing exchange) to reduce service costs and time
- Widest range of interface options (USB, RS 485 and 15 pin digital I/O as standard)
- Optimized size/performance ratio on 100 and 160 flanges

TURBOVAC iX

- Integrated vacuum system controller with flexible interfaces and several accessory ports for control of cooling units, valves, gauges, forevacuum pumps etc.
- Flexible accessory program options for easy plug & play
- Flexibility to match different process and application requirements

TURBOVAC T i, T iX

- Variant without Compound Stage
- increased gas throughput
- Increased tolerance against dust and particles
- Improved run-up time

Advantages to the User

TURBOVAC i

- Best performance and functionality for your money
- Maximum user flexibility for easy system integration, operation and control
- Highest productivity and system uptime at lowest CoO (Cost of Ownership)
- Improved pump-down time and target pressures
- Superior pumping performance for light gases
- Down-sizing of vacuum system in terms of costs and dimensions (use of small forevacuum pumps)

TURBOVAC iX

- Easy plug & play pump system control
- Avoid extra costs for separate pump system control units and cabling

TURBOVAC T i, T iX

- Suitable for demanding process applications and high throughput operation
- Fast cycle operation and pump down possible

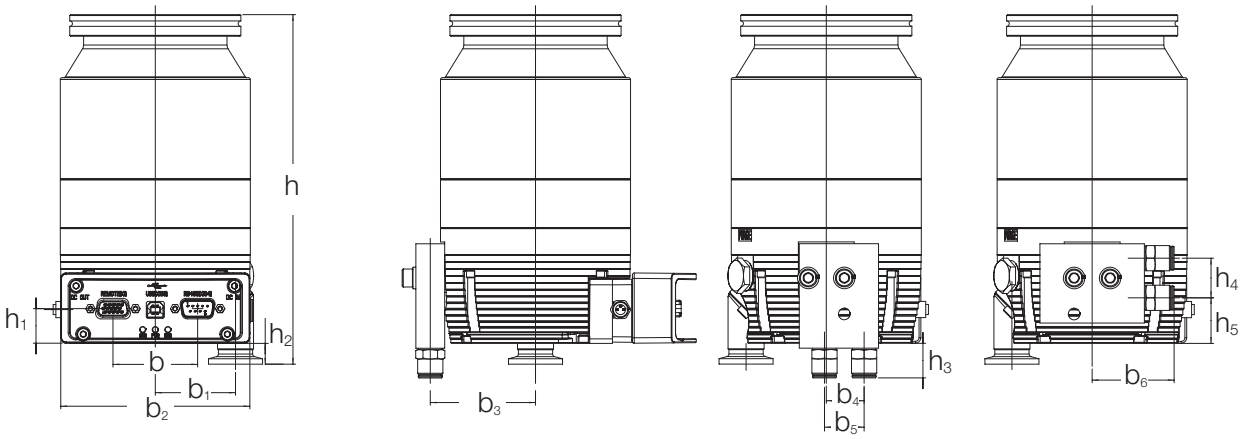

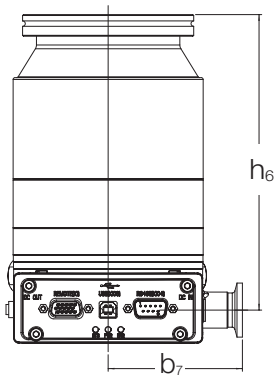

Typ	DN		a	a_1	b	b_1	b_2	b_3	b_4
TURBOVAC 90 i	ISO-K	mm (in.)	-	-	47 (1.85)	45 (1.77)	105 (4.13)	58 (2.28)	21 (0.83)
	CF	mm (in.)	-	-	47 (1.85)	45 (1.77)	105 (4.13)	58 (2.28)	21 (0.83)
TURBOVAC 250 i	ISO-K	mm (in.)	49 (1.93)	47 (1.85)	20 (0.79)	75 (2.95)	81 (3.19)	89 (3.50)	47 (1.85)
	CF	mm (in.)	49 (1.93)	-	20 (0.79)	75 (2.95)	81 (3.19)	89 (3.50)	47 (1.85)

	DN		b_5	b_6	b_7	d	d_1	h	h_1
TURBOVAC 90 i	ISO-K	mm (in.)	22 (0,87)	46 (1.81)	75 (2.95)	110 (4.33)	-	194 (7.64)	19 (0.75)
	CF	mm (in.)	22 (0,87)	46 (1.81)	75 (2.95)	110 (4.33)	-	194 (7.64)	19 (0.75)
TURBOVAC 250 i	ISO-K	mm (in.)	105 (4.13)	54 (2.13)	57 (2.24)	130 (5.12)	131 (5.16)	196 (7.32)	19 (0.75)
	CF	mm (in.)	105 (4.13)	54 (2.13)	52 (2.05)	151.5 (5.96)	131 (5.16)	205 (8.07)	19 (0.75)

	DN		h_2	h_3	h_4	h_5	h_6
TURBOVAC 90 i	ISO-K	mm (in.)	12 (0.47)	19 (0.75)	22 (0,87)	25 (0.98)	164 (6.46)
	CF	mm (in.)	12 (0.47)	19 (0.75)	22 (0,87)	25 (0.98)	164 (6.46)
TURBOVAC 250 i	ISO-K	mm (in.)	36 (1.41)	39 (1.54)	19 (0.75)	38 (1.50)	19 (0.75)
	CF	mm (in.)	36 (1.41)	39 (1.54)	19 (0.75)	38 (1.50)	19 (0.75)

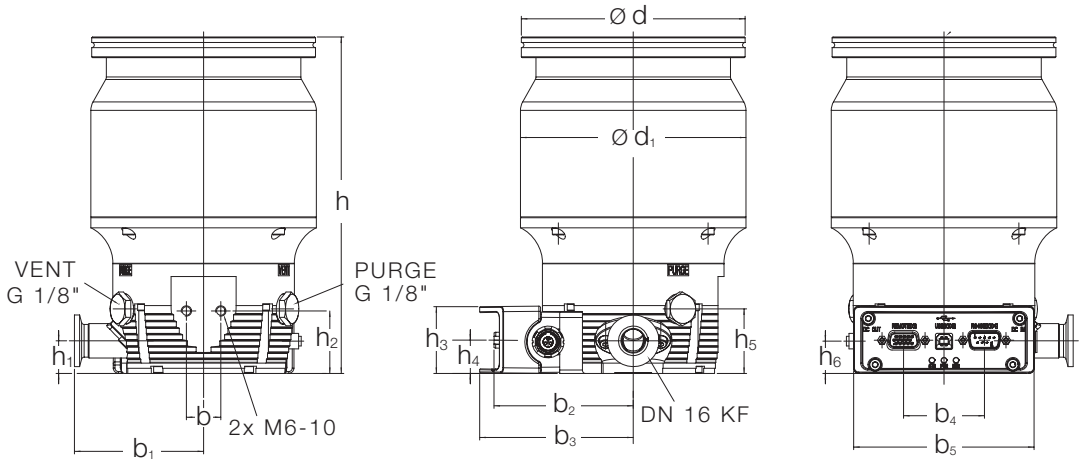

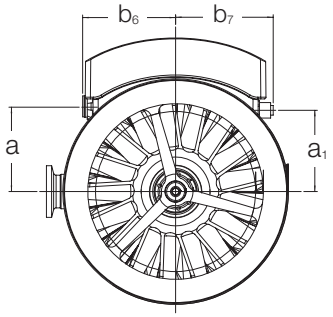

Dimensional drawing for the TURBOVAC pumps, 90 i top and 250 i bottom

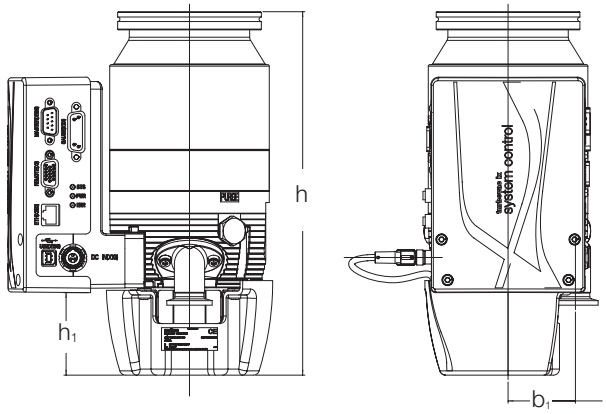

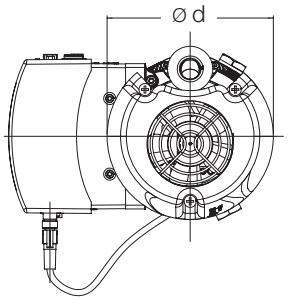

Typ	DN		a	a_1	a_2	b	b_1	b_2	b_3
TURBOVAC 90 iX	ISO-K	mm (in.)	-	-	-	-	45 (1.77)	-	-
	CF	mm (in.)	-	-	-	-	45 (1.77)	-	-
TURBOVAC 250 iX	ISO-K	mm (in.)	92 (3.62)	75 (295)	93 (3.66)	20 (0.79)	75 (2.95)	120 (4.72)	110 (4.33)
	CF	mm (in.)	92 (3.62)	75 (295)	93 (3.66)	20 (0.79)	75 (2.95)	120 (4.72)	110 (4.33)

	DN		d	d_1	h	h_1	h_2	h_3	h_4
TURBOVAC 90 iX	ISO-K	mm (in.)	110 (4.33)	-	240 (9.45)	55 (2.16)	-	-	-
	CF	mm (in.)	110 (4.33)	-	240 (9.45)	55 (2.16)	-	-	-
TURBOVAC 250 iX	ISO-K	mm (in.)	130 (5.12)	131 (5.16)	196 (7.72)	19 (0.75)	36 (1.42)	199 (7.83)	57 (2.24)
	CF	mm (in.)	151,5 (5.96)	131 (5.16)	205 (8.07)	19 (0.75)	36 (1.42)	208 (8.19)	66 (2.60)

	DN		h_5	h_6	h_7	h_8	h_9
TURBOVAC 90 iX	ISO-K	mm (in.)	-	-	-	-	-
	CF	mm (in.)	-	-	-	-	-
TURBOVAC 250 iX	ISO-K	mm (in.)	38 (1.50)	64 (2.52)	47 (1.85)	23 (0.91)	23 (0.91)
	CF	mm (in.)	38 (1.50)	64 (2.52)	47 (1.85)	23 (0.91)	23 (0.91)

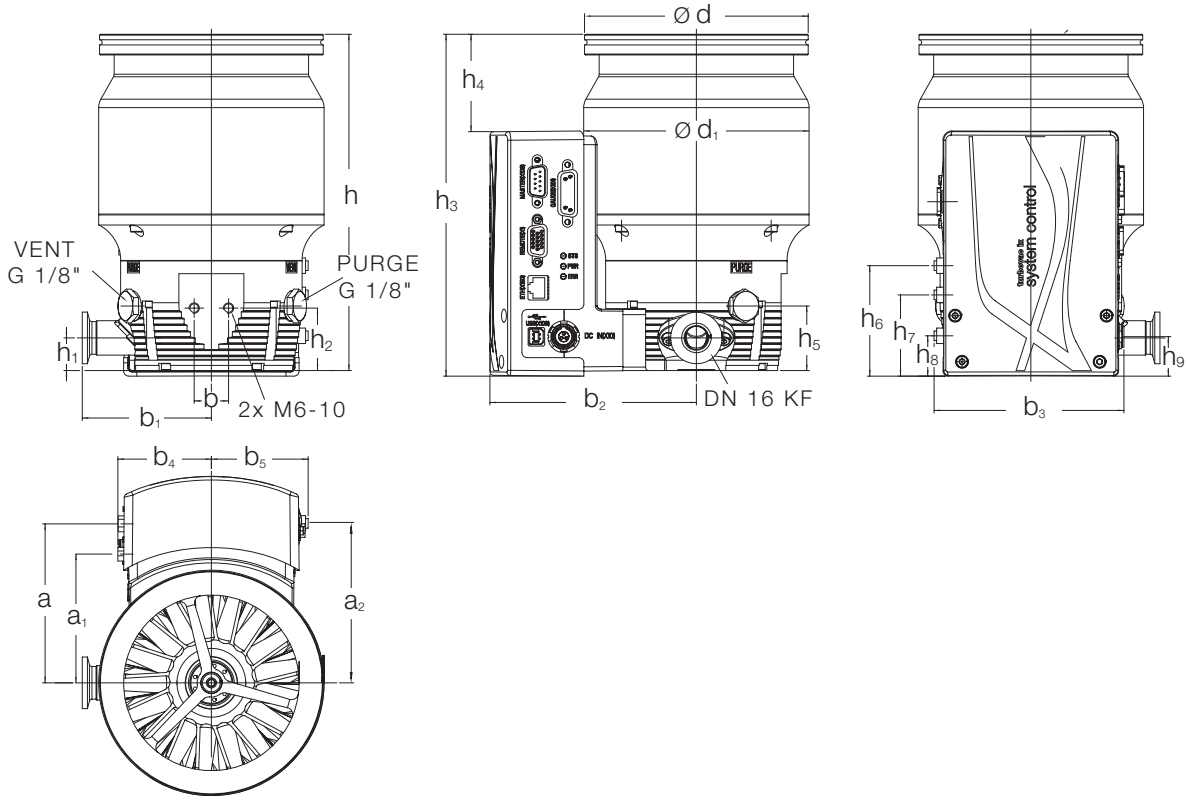

Dimensional drawing for the TURBOVAC pumps, 90 iX top and 250 iX bottom

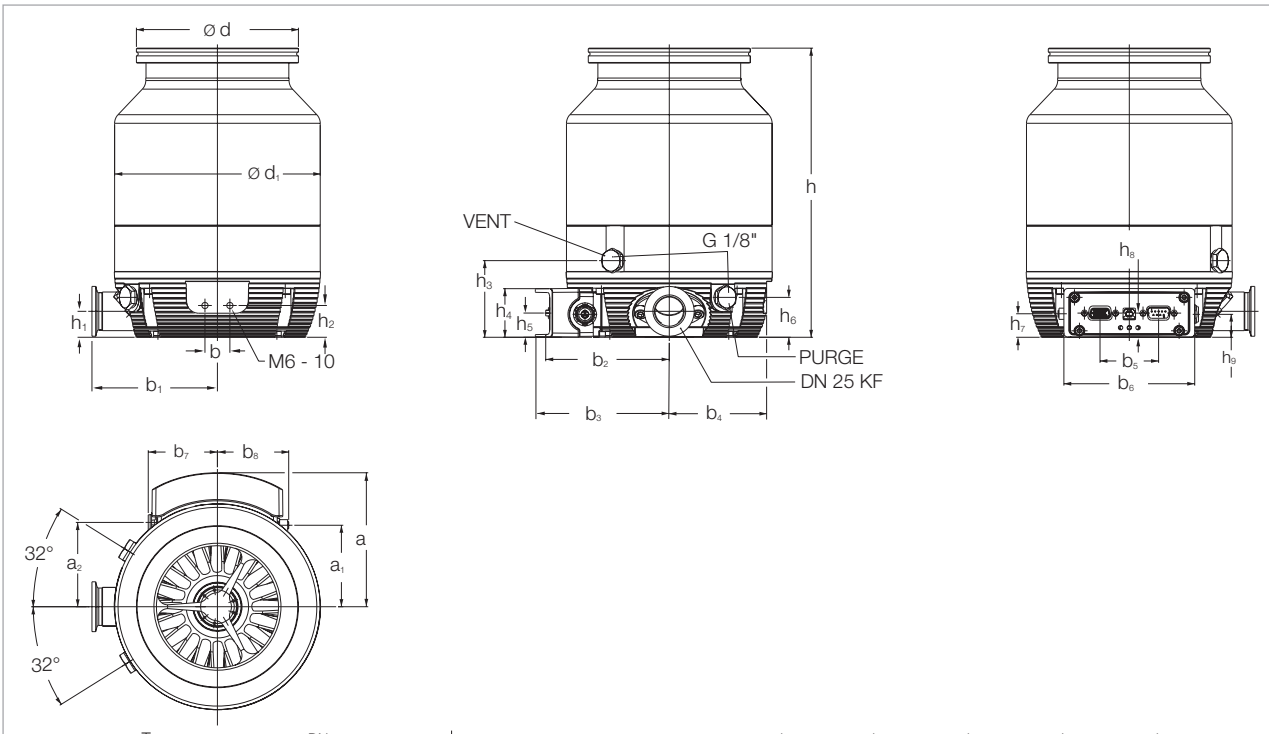

Type	DN		a	a_1	a_2	b	b_1	b_2	b_3	b_4
TURBOVAC (T) 350 i	ISO-K	mm (in.)	107.5 (4.23)	65.4 (2.57)	67.6 (2.66)	20 (0.79)	100.7 (3.96)	99.2 (3.91)	107.5 (4.23)	78.1 (3.07)
	CF	mm (in.)	107.5 (4.23)	65.4 (2.57)	67.6 (2.66)	20 (0.79)	100.7 (3.96)	99.2 (3.91)	107.5 (4.23	78.1 (3.07)
TURBOVAC (T) 450 i	ISO-K	mm (in.)	107.5 (4.23)	65.4 (2.57)	67.6 (2.66)	20 (0.79)	100.7 (3.96)	99.2 (3.91)	107.5 (4.23	78.1 (3.07)
	CF	mm (in.)	107.5 (4.23)	65.4 (2.57)	67.6 (2.66)	20 (0.79)	100.7 (3.96)	99.2 (3.91)	107.5 (4.23	78.1 (3.07)

	DN		b_5	b_6	b_7	b_8	d	d_1	h	h_1
TURBOVAC (T) 350 i	ISO-K	mm (in.)	47 (1.85)	105 (4.13)	55.5 (2.19)	57.2 (2.25)	130 (5.12)	165 (6.5)	232 (9.13)	20.8 (0.82)
	CF	mm (in.)	47 (1.85)	105 (4.13)	55.5 (2.19)	57.2 (2.25)	180 (7.09)	165 (6.5)	245 (9.65)	20.8 (0.82)
TURBOVAC (T) 450 i	ISO-K	mm (in.)	47 (1.85)	105 (4.13)	55.5 (2.19)	57.2 (2.25)	130 (5.12)	165 (6.5)	216 (8.5)	20.8 (0.82)
	CF	mm (in.)	47 (1.85)	105 (4.13)	55.5 (2.19)	57.2 (2.25)	180 (7.09)	165 (6.5)	222 (8.74)	20.8 (0.82)

	DN		h_2	h_3	h_4	h_5	h_6	h_7	h_8	h_9
TURBOVAC (T) 350 i	ISO-K	mm (in.)	25.5 (1.0)	61.5 (2.42)	39 (1.54)	19.4 (0.76)	32 (1.26)	19 (0.75)	18.8 (0.74)	18.4 (0.72)
	CF	mm (in.)	25.5 (1.0)	61.5 (2.42)	39 (1.54)	19.4 (0.76)	32 (1.26)	19 (0.75)	18.8 (0.74)	18.4 (0.72)
TURBOVAC (T) 450 i	ISO-K	mm (in.)	25.5 (1.0)	61.5 (2.42)	39 (1.54)	19.4 (0.76)	32 (1.26)	19 (0.75)	18.8 (0.74)	18.4 (0.72)
	CF	mm (in.)	25.5 (1.0)	61.5 (2.42)	39 (1.54)	19.4 (0.76)	32 (1.26)	19 (0.75)	18.8 (0.74)	18.4 (0.72)

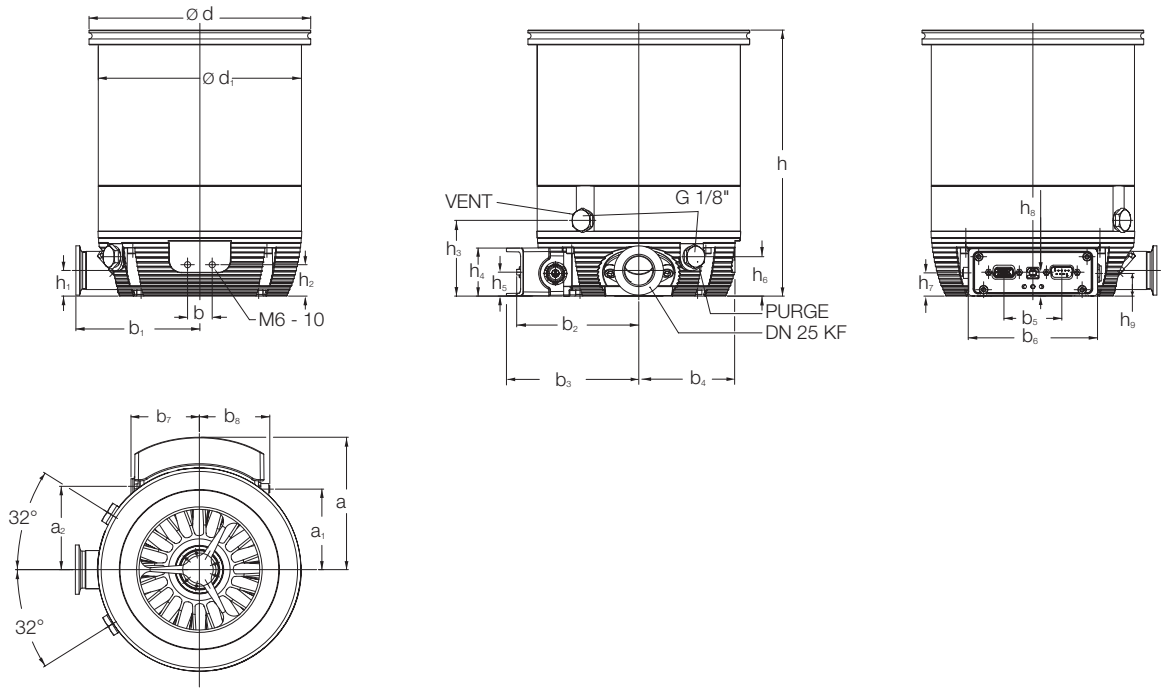

Dimensional drawing for the TURBOVAC (T) pumps, 350 i top and 450 i bottom

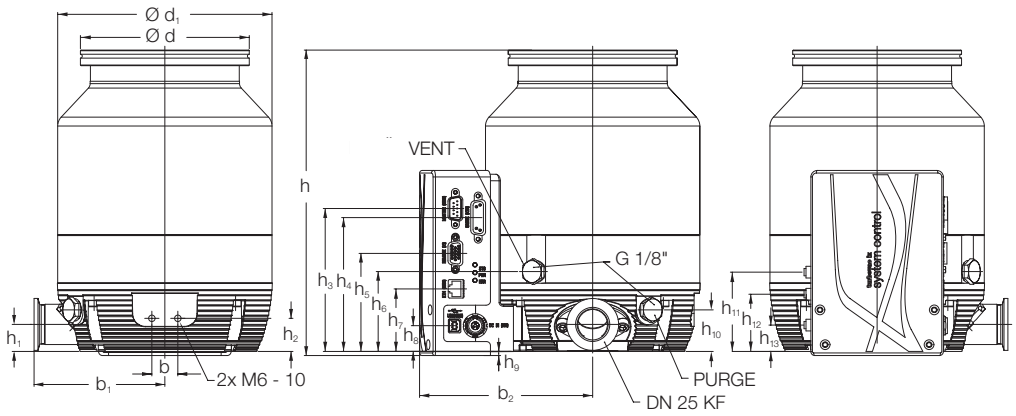

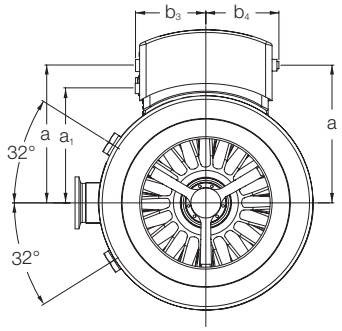

Type	DN		a	a_3	b	b_1	b_2	b_3	b_4
TURBOVAC (T) 350 iX	ISO-K	mm (in.)	111 (4.37)	78 (3.07)	20 (0.79)	101 (3.98)	138 (5.43)	54 (2.13)	56 (2.2)
	CF	mm (in.)	111 (4.37)	78 (3.07)	20 (0.79)	101 (3.98)	138 (5.43)	54 (2.13)	56 (2.2)
TURBOVAC (T) 450 iX	ISO-K	mm (in.)	111 (4.37)	78 (3.07)	20 (0.79)	101 (3.98)	138 (5.43)	54 (2.13)	56 (2.2)
	CF	mm (in.)	111 (4.37)	78 (3.07)	20 (0.79)	101 (3.98)	138 (5.43)	54 (2.13)	56 (2.2)

	DN		d	d_1	h	h_1	h_2	h_3	h_4	h_5
TURBOVAC (T) 350 iX	ISO-K	mm (in.)	130 (5.12)	165 (6.5)	235 (9.25)	21 (0.83)	26 (1.02)	110 (4.33)	103 (4.06)	76 (2.99)
	CF	mm (in.)	180 (7.09)	165 (6.5)	248 (9.76)	21 (0.83)	26 (1.02)	110 (4.33)	103 (4.06)	76 (2.99)
TURBOVAC (T) 450 iX	ISO-K	mm (in.)	130 (5.12)	165 (6.5)	219 (8.62)	21 (0.83)	26 (1.02)	110 (4.33)	103 (4.06)	76 (2.99)
	CF	mm (in.)	180 (7.09)	165 (6.5)	225 (8.86)	21 (0.83)	26 (1.02)	110 (4.33)	103 (4.06)	76 (2.99)

	DN		h_6	h_7	h_8	h_9	h_{10}	h_{11}	h_{12}	h_{13}
TURBOVAC (T) 350 iX	ISO-K	mm (in.)	62 (2.44)	48 (1.89)	20 (0.79)	3 (0.12)	32 (1.26)	64 (2.52)	47 (1.85)	23 (0.91)
	CF	mm (in.)	62 (2.44)	48 (1.89)	20 (0.79)	3 (0.12)	32 (1.26)	64 (2.52)	47 (1.85)	23 (0.91)
TURBOVAC (T) 450 iX	ISO-K	mm (in.)	62 (2.44)	48 (1.89)	20 (0.79)	3 (0.12)	32 (1.26)	64 (2.52)	47 (1.85)	23 (0.91)
	CF	mm (in.)	62 (2.44)	48 (1.89)	20 (0.79)	3 (0.12)	32 (1.26)	64 (2.52)	47 (1.85)	23 (0.91)

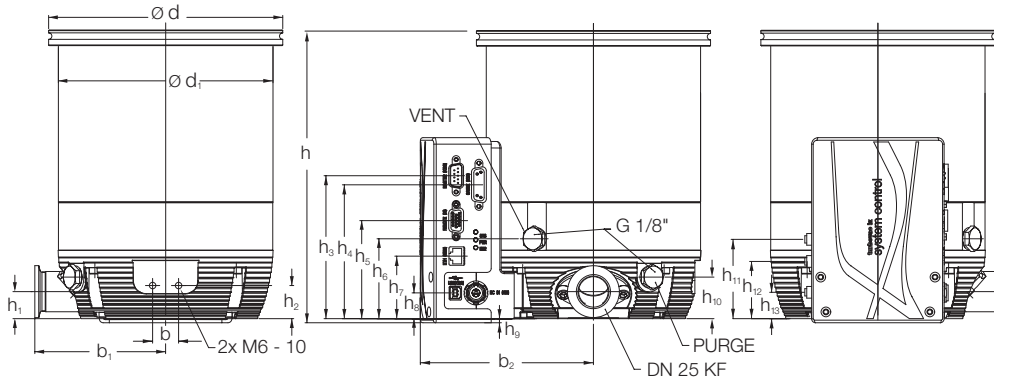

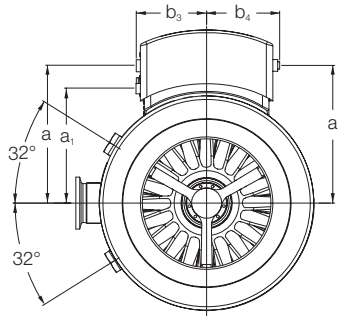

Dimensional drawing for the TURBOVAC (T) pumps, 350 iX top and 450 iX bottom

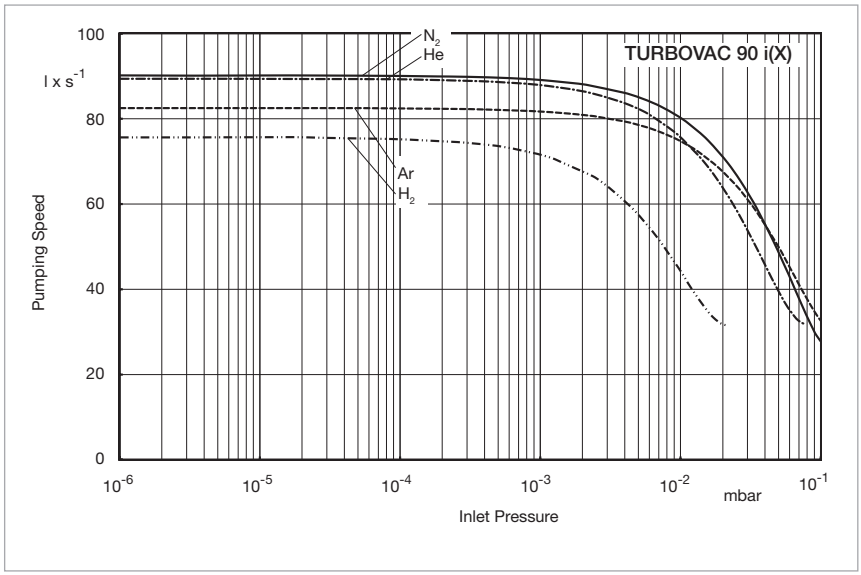

Pumping speed as a function of the inlet pressure for the TURBOVAC 90 i (DN 63 Flange)

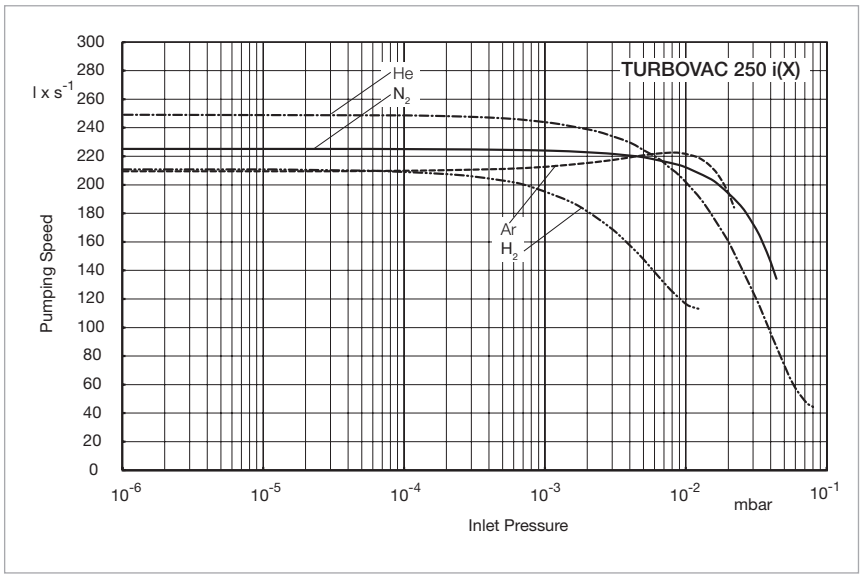

Pumping speed as a function of the inlet pressure for the TURBOVAC 250 i

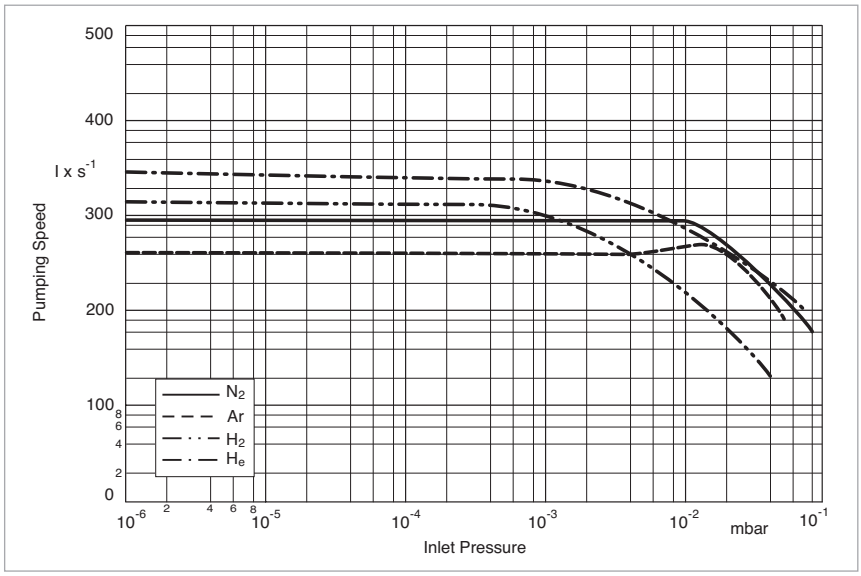

Pumping speed as a function of the inlet pressure for the TURBOVAC 350 i

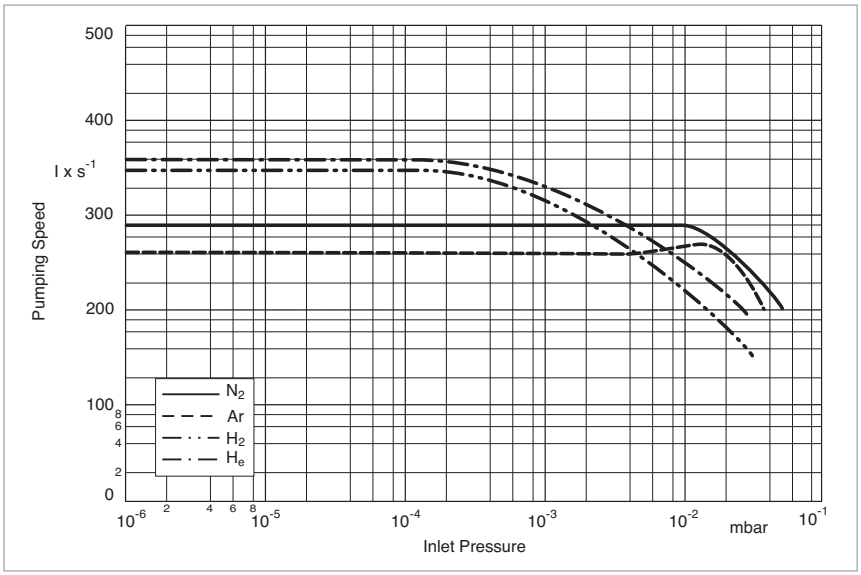

Pumping speed as a function of the inlet pressure for the TURBOVAC T 350 i

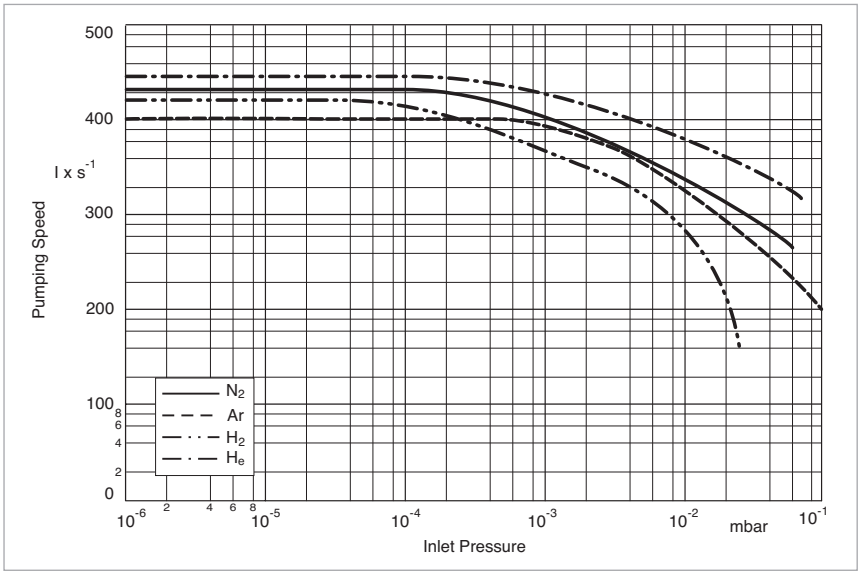

Pumping speed as a function of the inlet pressure for the TURBOVAC 450 i

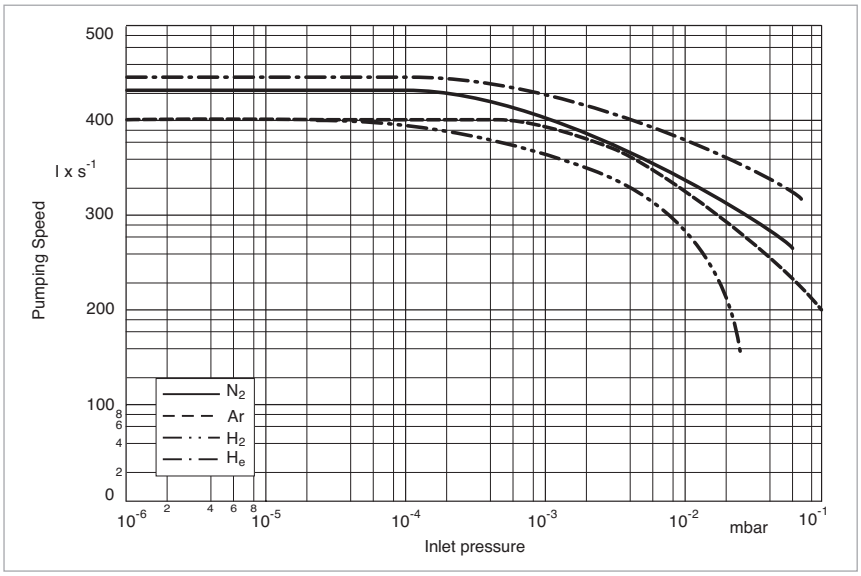

Pumping speed as a function of the inlet pressure for the TURBOVAC T 450 i

Technical Data

		TURBOVAC					
		90 i/iX	250 i/iX	350 i/iX	450 i/iX	T 350 i/iX	T 450 i/iX
High-vacuum connection	DN	63 ISO-K 63 CF	100 ISO-K 100 CF	100 ISO-K 100 CF	160 ISO-K 160 CF	100 ISO-K 100 CF	160 ISO-K 160 CF
Forevacuum connection	DN	16 ISO-KF	16 ISO-KF	25 ISO-KF	25 ISO-KF	25 ISO-KF	25 ISO-KF
Pumping speed							
N_2	l/s	90	225	290	430	290	430
Ar	l/s	83	210	260	400	260	400
He	l/s	90	250	360	440	360	440
H_2	l/s	78	210	350	420	320	400
Gas throughput							
N_2	mbar x l/s	10	6	4.5	4.5	11.5	115
Ar	mbar x l/s	3	3	2	2	6	6
He	mbar x l/s	11	6	8	8	20	20
H_2	mbar x l/s	11	>10	8	8	20	20
Compression ratio							
N_2		1×10^{11}	1×10^{11}	1×10^{11}	1×10^{11}	1×10^{10}	1×10^{10}
Ar		1×10^{11}	1×10^{11}	1×10^{11}	1×10^{11}	1×10^{11}	1×10^{11}
He		-	-	1×10^{8}	1×10^{8}	1×10^{6}	1×10^{6}
H_2		5×10^{7}	2×10^{7}	1×10^{6}	1×10^{6}	1×10^{4}	1×10^{4}
Ultimate pressure with 2-stage oil-sealed rotary vane vacuum pump ISO-K / CF flange	mbar (Torr)	$< 8 \times 10^{-8} / < 5 \times 10^{-10}$ $(< 6 \times 10^{-8} / < 3.75 \times 10^{-10})$					
Max. forevacuum pressure N_2	mbar (Torr)	14 (10.5)	14 (10.5)	10 (7.5)	10 (7.5)	0.5 (0.375)	0.5 (0.375)
Recommended forevacuum pumps							
	TRIVAC	D 2,5 E / D 4 B	D 2,5 E / D 4 B	D 4 B	D 4 B	D 16 B	D 16 B
	SCROLLVAC	SC 5 D	SC 5 D / 15 D	SC 5 D / 15 D	SC 5 D / 15 D	SC 15 D / 30 D	SC 15 D / 30 D
	DIVAC	1.4 HV3	3.8 HV3	3.8 HV3	3.8 HV3	–	–
Operating speed	min^{-1} (rpm)	72 000	72 000	60 000	60 000	60 000	60 000
Speed adjustment range	%	62 to 100	62 to 100	50 to 100	50 to 100	50 to 100	50 to 100
Run-up time, approx.	min	1.5	2	5.5	5.5	3.5	3.5
Ambient temperature							
during operation	°C	+5 to +45					
	(°F)	(+41 to +113)					
during storage	°C	-15 to -70					
	(°F)	(+5 to -94)					
Cooling							
standard		Convection					
optional		Air or water					
Cooling water connection		Plug connection for 6 x 1 hose					
alternatively		G 1/8" Screw-in thread					
Cooling water consumption	l/h	30 to 60	30 to 60	50 to 100	50 to 100	50 to 100	50 to 100
Permissible cooling water pressure	bar(g)	3 to 6					
Permissible cooling water temperature	°C	+15 to +35					
	(°F)	(+59 to +95)					
Noise level							
with convection cooling	db(A)	< 41	< 41	< 44	< 44	< 44	< 44
with radial cooler	db(A)	< 44	< 44	< 47	< 47	< 47	< 47
with axial cooler	db(A)	< 49	< 49	< 49	< 49	< 49	< 49

Additional Technical Data for the Frequency Converter (i Version)

		TURBOVAC					
		90 i	250 i	350 i	450 i	T 350 i	T 450 i
Technical Data for the integrated Drive Electronics							
Supply voltage	V DC	24/48 ±10%					
Max. current consumption	A	10 at 24 V DC					
Max. power consumption	W	240					
Power consumption at ultimate pressure	W	20					
Type of protection	IP	40					
Interfaces		RS 485, USB, 15-pin digital I/O					
Other interfaces		Upon request					
Accessory connection		1 pcs. M 8 connector, 24 V DC					
Weight ISO-K / CF	kg (lbs)	3.1 / 4.8 (6.8 / 10.6)	4 / 6.6 (8.8 / 14.5)	7.5 / 11.5 (16.5 / 25.4)	7.7 / 12.5 (17.0 / 27.6)	7.0 / 11.0 (15.4 / 14.3)	7.2 / 12.0 (15.9 / 26.5)

Additional Technical Data for the Frequency Converter (iX-Version)

		TURBOVAC					
		90 iX	250 iX	350 iX	450 iX	T 350 iX	T 450 iX
Technical Data for the integrated Drive Electronics and Vacuum System Controller							
Supply voltage	V DC	24/48 ±10%					
Max. current consumption	A	10 at 24 V DC					
Max. power consumption	W	240					
Power consumption at ultimate pressure	W	20					
Type of protection	IP	40					
Interfaces		USB+,15 pin Standard, Anybus (either RS 485, RS 232, Profibus, ...)					
Accessory connections		3 pcs. M 8 connector, 24 V DC					
Max. load for the 24 V DC output (cooler or valve supply)	V / W	24 / max. 12					
Gauge head connection		15-way Sub-D					
Weight ISO-K / CF	kg (lbs)	3.6 / 5.3 (7.9 / 11.7)	4,5 / 7.1 (9.9 / 15.6)	8.0 / 12.0 (17.6 / 26.5)	8.2 / 13.0 (18.1 / 28.7)	7.5 / 11.5 (16.5 / 25.4)	7.7 / 12.5 (17.0 / 27.6)

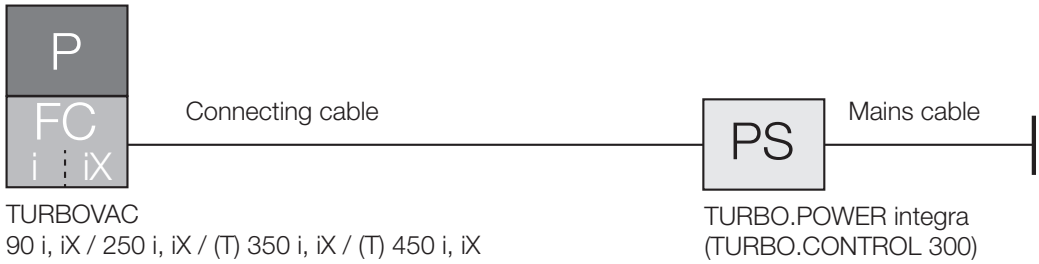

Ordering Information

TURBOVAC

	Wide Range				Classic	
	90 i	250 i	350 i	450 i	T 350 i	T 450 i
	Part No.	Part No.	Part No.	Part No.	Part No.	Part No.
TURBOVAC with integrated frequency converter, RS 485, USB+ and 15-Pin digital I/O interface DN 40 ISO-K	810011V1000	–	–	–	–	–
DN 63 ISO-K	810031V1000	–	–	–	–	–
DN 63 CF	810041V1000	–	–	–	–	–
DN 100 ISO-K	–	820051V1000	830051V1000	–	830050V1000	–
DN 100 CF	–	820061V1000	830061V1000	–	830060V1000	–
DN 160 ISO-K	–	–	–	830071V1000	–	830070V1000
DN 160 CF	–	–	–	830081V1000	–	830080V1000
other interfaces	Upon request					

	Wide Range				Classic	
	90 iX	250 iX	350 iX	450 iX	T 350 iX	T 450 iX
	Part No.	Part No.	Part No.	Part No.	Part No.	Part No.
TURBOVAC with integrated frequency converter, and vacuum system controller, RS 485, USB+ and 15-Pin digital I/O interface DN 63 ISO-K	810031V3300	–	–	–	–	–
DN 63 CF	810041V3300	–	–	–	–	–
DN 100 ISO-K	–	820051V3300	830051V3300	–	830050V3300	–
DN 100 CF	–	820061V3300	830061V3300	–	830060V3000	–
DN 160 ISO-K	–	–	–	830071V3300	–	830070V3300
DN 160 CF	–	–	–	830081V3300	–	830080V3300
other interfaces	Upon request					

Included in the Delivery of the Pump
High and forevacuum flanges are protective-capped
The flange mounting components and the inlet screen are not included in the delivery

Ordering Information

TURBOVAC (T)

	90 i, iX / 250 i, iX / 350 i, iX / 450 i, iX
Mandatory Accessories P PS	Part No.
Power supply TURBO.POWER integra, including 0.3 (1.1 ft) long cable	800100V0003
Mains cable, 3 m (10.5 ft) EU plug UK plug US plug 5-15P, 115 V	 800102V0002 800102V0003 800102V1002
Cable pump – TURBO.POWER integra 1 m (3.5 ft) 3 m (10.5 ft) 5 m (17.5 ft)	 800096V0100 800096V0300 800096V0500
Mounting kit TURBOVAC DN 63 ISO-K	 800134V0010
DN 100 ISO-K	800134V0020
DN 160 ISO-K	800134V0030
DN 100 ISO-K to ISO-F	800134V0025
DN 160 ISO-K to ISO-F	800134V0035
DN 63 CF	800134V0011
DN 100 CF	800134V0021
DN 160 CF	800134V0031

Forevacuum pumps TRIVAC D 4 B and TRIVAC D 16 B see Catalog Part “Oil Sealed Vacuum Pumps”

Forevacuum pumps SCROLLVAC 7 plus to SCROLLVAC 18 plus and DIVAC 3.8 HV3
see Catalog Part “Dry Compressing Vacuum Pumps”

Accessories, optional P	Part No.
Power supply, cable, other accessories	
24VDC display unit TURBO.CONTROL i	800100V0004
Plug-in power supply 24 V/DC – TURBO.CONTROL i	800110V0027
Standard cable for communication – TURBO.CONTROL i	
USB cable 2.0 Type A/B, 1.8 m (5.9 ft)	800110V0108
RS485 cable, 5 m (16.4 ft)	800103V0029
RS485 cable, 1 m (3.3 ft)	800103V0027
Power supply and control unit TURBO.CONTROL 300	800100V0001
Cable pump – TURBO.CONTROL 300	
1 m (3.3 ft)	800092V0100
3 m (10.5 ft)	800092V0300
5 m (16.4 ft	800092V0500
Extension cable - only in combination with connecting cable 1m (3.5 ft)	
10 m (35 ft)	800092V1000
20 m (70 ft)	800092V2000
24/48 V DCIn plug TURBOVAC	800090V0000
USB-Kabel 2.0, Typ A/B, 1.8 m (5.9 ft) long	800110V0108
Y cable M 8	800110V0020
Relaybox for forevacuum pump, 1-phase, 10 A	800110V0030
Start stop switch	800110V0021
Cooling	
Air cooler	
TURBOVAC 90 i(X)	
radial	800136V0007
axial	800136V0008
TURBOVAC 250 i(X)	
radial	800136V0009
axial	800136V0008
TURBOVAC 350/450 i(X)	
radial	800136V0005
axial	800136V0006
Water cooling TURBOVAC i(X), connection thread G 1/8”	800135V0005
Water cooling TURBOVAC i(X), connection thread G 1/4”	800135V0006
Venting and purge gas	
Venting valve, 24 V DC, G 1/8"	800120V0012
Power failure venting valve, 24 V DC, G 1/8"	800120V0022
Purge gas valve, 24 V DC, G 1/8", 24 sccm	800120V0013
Purge gas throttle, 24 sccm	800120V0014
Air filter, G 1/8"	800110V0022
Heating	
Flange heater (needs mains cable, see above)	
DN 63 CF, 230 V	800137V0003
DN 63 CF, 115 V	800137V0004
DN 100 CF, 230 V	800137V0005
DN 100 CF, 115 V	800137V0006
DN 160 CF, 230 V	800137V0007
DN 160 CF, 115 V	800137V0008
Installation	
Vibration absorber	
DN 100 ISO-K	800131V1100
DN 160 ISO-K	500073
DN 100 CF	500071
DN 160 CF	500072
Centering ring	
with fine inlet screen, 0.8 mm (0.03") mesh	
DN 63 ISO-K/F	800133V0012
DN 100 ISO-K/F	800133V0022
DN 160 ISO-K/F	800133V0032
with coarse inlet screen, 3.2 mm (0.13") mesh	
DN 63 ISO-K/F	800133V0011
DN 100 ISO-K/F	800133V0021
DN 160 ISO-K/F	800133V0031
Fine Inlet screen, 0.8 mm (0.03") mesh	
DN 63 CF	800132V0012
DN 100 CF	800132V0022
DN 160 CF	800132V0032
Coarse inlet screen, 3.2 mm (0.13") mesh	
DN 63 CF	800132V0011
DN 100 CF	800132V0021
DN 160 CF	800132V0031

Special Turbomolecular Pumps

TURBOVAC i Multi Inlet Cartridge

Precision is key when it comes to analytical instruments.

Outfitted with two or more inlets, the innovative turbopumps with integrated drive electronics provide extraordinary pumping performance and are adaptable to the system requirements of each instrument.

In combination with our support for the whole vacuum system design, it will result in the best possible level of pump system integration you have ever experienced.

The TURBOVAC 350-400 i Multi Inlet line has been especially developed to meet the requirements of analytical instruments and features an extremely high level of flexibility, allowing you to choose the number, height and position of the multiple vacuum ports. The result: a pump that is perfectly fitted to your specific performance needs and installation requirements.

Additionally, we offer the support and experience in vacuum system design which opens a wide range of possibilities, from the adaptation of the pump housing to your vacuum chamber through to the design of a custom-built housing/chamber that meets your particular needs. Your benefit: optimum system integration of the pump(s) into your instrument and a reduced time to market.

Your Advantage

- Perfect integration of the pump(s) within your instrumentation
- Cutting of system costs
- Smaller size of the analytical system
- Reduction in the number of individual vacuum components
- Choice between cartridge and custom pump housing

In order to simplify installation, operation and control, all TURBOVAC i variants feature an integrated electronic drive with 24/48 V DC supply and a detachable operator interface with USB, RS 485 and digital I/O connections.

Performance

- Industry-leading pumping speed especially for light gases (up to 60 % higher than existing products)
- Optimized rotor diameter to provide maximum pumping performance
- > 40 l/s pumping speed at Interstage port 2

Flexibility

- Vacuum port design flexibility
  - Rotatable fore-vacuum port
  - Multiple interstage ports
  - High level of flexibility in terms of height and position of vacuum ports
- Unique cartridge solutions for optimized system integration with fast and simple field replacement
- Special pump housing solutions adapted to your instrument
- Complete vacuum system design including your vacuum chamber
- Variable rotor and Holweck design to adapt the performance to your application

Installation, operation and control

- Integrated 24/48 V DC drive electronics to avoid expensive cabling
- Widest range of communication interfaces: USB, RS 485 and remote 15 pin digital I/O as standard options
- Highly efficient motor
- Thermal isolation by design for optimized cooling of bearing and improved pump lifetime
- Simply-supported shaft reduces vibration
- Maintenance free upper passive magnetic bearing
- Oil free, lifetime lubricated lower mechanical ceramic ball bearing, field-replaceable

Outstanding performance

Thanks to its variable rotor and drag stage design, our new Multi Inlet product line provides the highest performance for all mass spectrometer applications. With increased pumping speed levels especially for light gases which are up to 60% higher than those offered by other products currently on the market, it provides significant advantages for your instruments: lower pressures, improved detection sensitivity levels and higher sample throughput rates.

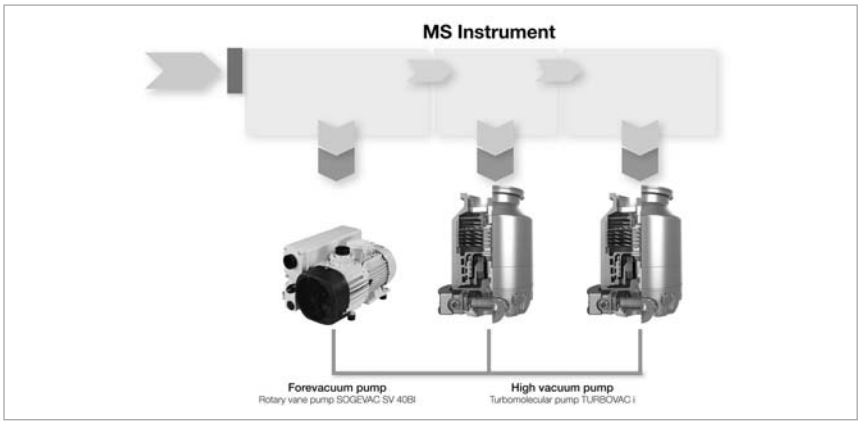

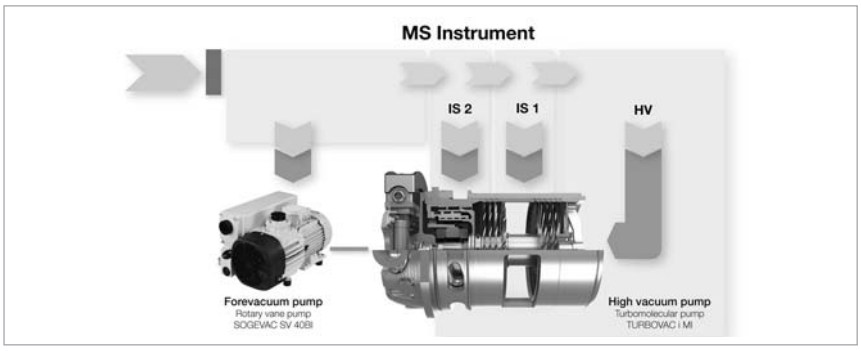

Superior reliability

The unique maintenance and oil free hybrid bearing system is characterized by its extreme reliability and durability – that's because we equipped it with an innovative lifetime lubrication system that never needs an oil change.
The simply-supported shaft system results in a low vibration pump design which reduces noise, mechanical stress and negative impact on vibration sensitive applications. Optimized cooling of the bearings is ensured through thermal isolation and the highly efficient motor. To protect the bearings from critical gases or particles, all pumps are equipped with a purge port. As a consequence, not only pump lifetime is increased significantly, but also system uptime as well as productivity. In combination with low costs of ownership, the operation of your vacuum system will be more efficient than ever.

Advantages to the User

- High gas throughput
- High effective pumping speed
- High efficiency for analytical instruments
- High detection sensitivity
- High sample throughput
- Free of hydrocarbons
- Hybrid bearing suspension for low vibration levels
- Space and weight saving
- Low component count
- Favourable price-to-performance ratio
- Installation and user friendly
- Practically maintenance free

Typical Applications

For example

- LC-MS (linking of a liquid chromatograph to a mass spectrometer)
- GC/MS (linking of a gas chromatograph to a mass spectrometer)
- TOF-MS (time-of-flight mass spectrometer)
- ICP-MS (inductively coupled plasma mass spectrometry)
- Helium leak detectors

Technical Features

- Dual Inlet (pumping down of two analysis chambers)
- Triple inlet (pumping down of three analysis chambers)
- High effective pumping speed
  HV stage up to 400 l/s
  Interstage IS 1 up to 300 l/s
  Interstage IS 2 up to 50 l/s
- Cartridge solutions (without pump housing) are available
- Compact vacuum system

Customized versions are available upon request

MAG INTEGRA – Magnetic Rotor Suspension with integrated Frequency Converter, with Compound Stage

TURBOVAC MAG W 300/400 iP

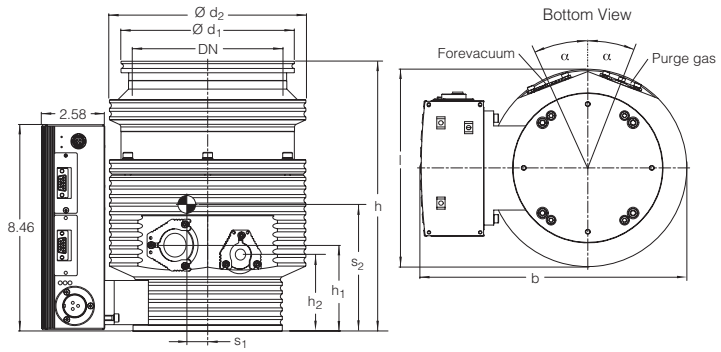

		DN	⌀ d_1	⌀ d_2	h	h_1	h_2	l	b	b*	α	s_1	s_2
MAG W 300 iP	mm	100 ISO-K	130.0	155.0	250.0	77.7	70.0	156.0	250.0	233.0	16°	19.0	103.0
	in.		5.12	6.10	9.84	3.06	2.76	6.14	9.84	9.17	16°	0.75	4.06
	mm	100 CF	151.5	155.0	264.3	77.7	70.0	156.0	250.0	233.0	16°	15.0	129.0
	in.		5.96	6.10	10.41	3.06	2.76	6.14	9.84	9.17	16°	0.59	5.08
MAG W 400 iP	mm	160 ISO-K	180.0	155.0	241.0	77.7	70.0	168.5	262.5	245.5	16°	19.0	106.0
	in.		7.09	6.10	9.49	3.06	2.76	6.63	10.33	9.67	16°	0.75	4.17
	mm	160 CF	202.5	155.0	234.7	77.7	70.0	181.2	273.7	256.7	16°	14.0	129.0
	in.		7.97	6.10	9.24	3.06	2.76	9.13	10.78	10.11	16°	0.55	5.08

b* = width with plug of the DRIVE/BEARING cable connected instead of MAG.DRIVE iS

Dimensional drawing for the TURBOVAC MAG W 300/400 iP

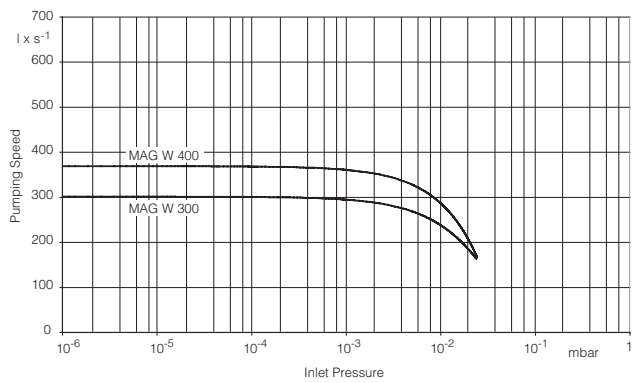

Pumping speed for N_2 of the TURBOVAC MAG W 300/400 iP as a function of the inlet pressure

Typical Applications

- Gas analysis systems
- Particle accelerators
- Electron microscopes
- Research
- Coating systems

Technical Features

- Installation in any orientation
- DN 100 or 160 ISO-K and/or CF high vacuum connection
- DN 16 ISO-KF with clamped fore vacuum connection
- Purge gas/venting connection DN 16 ISO-KF with clamped connection (purge/vent)
- Water or air cooling optional
- 2 slots for industrial communications modules
  - Standard 9 pin 24 V SPS PLC-IO in Control Slot
  - RS 232 C in Service Slot
  - further interfaces can be fitted: Profibus, RS 485 C, DeviceNet, EtherNet IP, EtherCat

Advantages to the User

- Highest pumping speed from the smallest possible size
- New standard regarding maintenance-free systems
- Suitability for vibration sensitive applications in the area of analytical engineering, thin-film technology, electron microscopes, research, development among others
- Flexibility due to the modular concept; the converter is optionally also available by way of a bench top unit

Technical Data

		TURBOVAC MAG			
		W 300 iP		W 400 iP	
Inlet flange	DN	100 ISO-K	100 CF	160 ISO-K	160 CF
Pumping speed					
N_2	l/s	300	300	365	365
Ar	l/s	260	260	330	330
He	l/s	260	260	280	280
H_2	l/s	190	190	200	200
Operating speed	min^{-1}	58 800	58 800	58 800	58 800
Compression ratio					
N_2		1.0×10^{10}	1.0×10^{10}	1.0×10^{10}	1.0×10^{10}
H_2		3.2×10^{3}	3.2×10^{3}	3.2×10^{3}	3.2×10^{3}
He		9.2×10^{4}	9.2×10^{4}	9.2×10^{4}	9.2×10^{4}
Ultimate pressure	mbar (Torr)	$< 10^{-8}$ ($< 0.75 \times 10^{-8}$)	$< 10^{-10}$ ($< 0.75 \times 10^{-10}$)	$< 10^{-8}$ ($< 0.75 \times 10^{-8}$)	$< 10^{-10}$ ($< 0.75 \times 10^{-10}$)
Max. degassing temperature	°C (°F)	–	80 (176)	–	80 (176)
Max. foreline pressure for N_2	mbar (Torr)	8 (6)	8 (6)	8 (6)	8 (6)
Recommended backing pump		TRIVAC D 2,5 E TRIVAC D 8 B	TRIVAC D 2,5 E TRIVAC D 8 B	TRIVAC D 2,5 E TRIVAC D 8 B	TRIVAC D 2,5 E TRIVAC D 8 B
Run-up time	min	< 5	< 5	< 5	< 5
Foreline flange (clamped)	DN	16 ISO-KF	16 ISO-KF	16 ISO-KF	16 ISO-KF
Purge / vent port (clamped)	DN	16 ISO-KF	16 ISO-KF	16 ISO-KF	16 ISO-KF
Water cooling connection (optional)	G	1/8"	1/8"	1/8"	1/8"
Weight, approx.	kg (lbs)	12 (26)	12 (26)	12 (26)	12 (26)

Technical Data

		Integrated Frequency Converter TURBO.DRIVE iS			
Power supply	V	48	48	48	48
Ripple	%	< 2	< 2	< 2	< 2
Power consumption					
maximum	W	400	400	400	400
at ultimate pressure	W	259	259	259	259
DC current consumption, max.	A	7.5 to 9.3	7.5 to 9.3	7.5 to 9.3	7.5 to 9.3
DC power supply voltage range	V	43 to 53	43 to 53	43 to 53	43 to 53
Length of the DC connection cable, max.					
at 3 x 1.5 mm^2	m (ft)	5 (17.5)	5 (17.5)	5 (17.5)	5 (17.5)
at 3 x 2.5 mm^2	m (ft)	20 (70.0)	20 (70.0)	20 (70.0)	20 (70.0)
Contact rating for the relays, max.		32 V; 0.5 A	32 V; 0.5 A	32 V; 0.5 A	32 V; 0.5 A
Permissible ambient temperature					
during operation	°C (°F)	+10 to +40 (+50 to +104)	+10 to +40 (+50 to +104)	+10 to +40 (+50 to +104)	+10 to +40 (+50 to +104)
during storage	°C (°F)	0 to +60 (0 to +140)	0 to +60 (0 to +140)	0 to +60 (0 to +140)	0 to +60 (0 to +140)
Relative humidity of the air, non-condensing	%	5 to 85	5 to 85	5 to 85	5 to 85
Protection class	IP	30	30	30	30
Overvoltage category		II	II	II	II
Pollution category		2	2	2	2

TURBOVAC MAG W 300 iP with Integrated Frequency Converter and Seal Gas Connection	P FC	Part No.	
DN 100 ISO-K		410300V0505	
DN 100 CF		410300V0506	
TURBOVAC MAG W 400 iP **with Integrated Frequency Converter and Seal Gas Connection**	**P FC**		
DN 160 ISO-K		410400V0505	
DN 160 CF		410400V0506	
Mandatory Accessories	**P FC**		
Power supply TURBO.POWER 501		410300V5221	
DC cable frequency converter - power supply		410300V2001	
1 m (3.5 ft)		410300V2003	
3 m (10.5 ft)		410300V2005	
5 m (17.5 ft)		410300V2010	
10 m (35.0 ft)		410300V2020	
20 m (70.0 ft)			
Mains cable, 3 m (10.5 ft)		800102V0002	
with EURO plug		800102V1002	
with US plug 5-15 P			
Forevacuum pump			
TRIVAC D 2,5 E		140 000	
220 – 240 V, 50 Hz; 230 V, 60 Hz; Schuko plug, EURO version		140 002	
110 – 120 V, 50/60 Hz; NEMA plug, US version			
TRIVAC D 8 B		112 55	
1 phase motor; 230 V, 50/60 Hz		112 56	
3 phase motor; 230/400 V, 50 Hz; 250/440 V, 60 Hz			

With integrated Frequency Converter

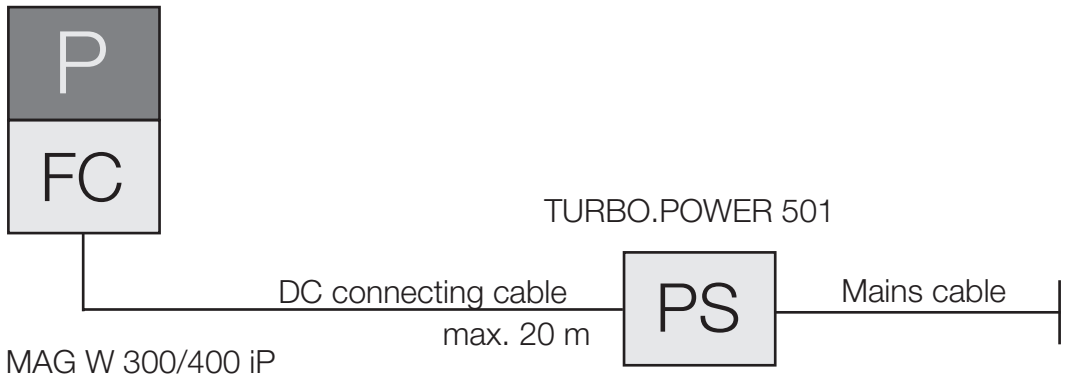

Ordering Information **TURBOVAC MAG W 300/400 iP**

Accessories, optional P	Part No.
Inlet screen	
DN 100 ISO-K	
coarse (3.2 x 3.2 mm (0.13 x 0.13 in.))	**800132V0101**
fine (1.6 x 1.6 mm (0.06 x 0.06 in.))	**800132V0102**
DN 100 CF	
coarse (3.2 x 3.2 mm (0.13 x 0.13 in.))	**200 91 514**
fine (1.6 x 1.6 mm (0.06 x 0.06 in.))	**E 200 17 195**
DN 160 ISO-K	**E 200 00 307**
DN 160 CF	**E 200 17 247**
Flange heater	
100 CF, 230 V, 50 Hz	**854 27**
100 CF, 115 V, 60 Hz	**854 28**
160 CF, 230 V, 50 Hz	**854 37**
160 CF, 115 V, 60 Hz	**854 38**
Water cooling unit	**410300V0101**
Air cooling unit	**410300V0102**
START/STOP switch for manual operation of the turbomolecular pump	**152 48**
DC plug	**800 001 694**
Solenoid venting valve, normally closed	
24 V DC, DN 16 ISO-KF	**800120V0011**
Power failure venting valve, normally open	**800120V0021**
Included in the Delivery of the Pump P	
Flanges for forevacuum, venting and purge gas are blank-flanged	
Centering ring with FPM sealing ring and a clamping yoke	

MAG INTEGRA – Magnetic Rotor Suspension with integrated Frequency Converter, with Compound Stage

TURBOVAC MAG W 600/700 iP

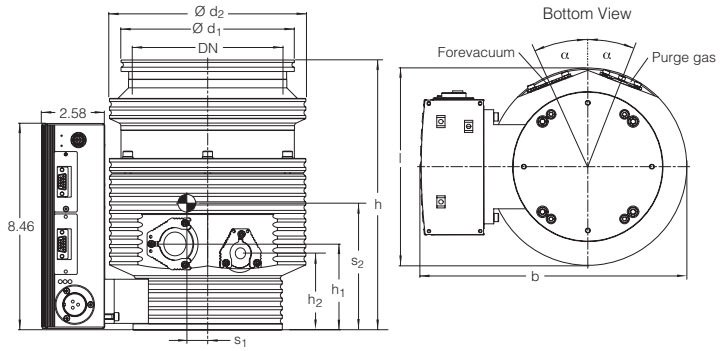

		DN	⌀ d_1	⌀ d_2	h	h_1	h_2	l	b	b*	α	s_1	s_2
MAG W 600 iP	mm	160 ISO-K	180.0	204.0	281.5	90	80	204.0	274.5	257.5	21°	13.0	121.0
	in.		7.09	8.03	11.08	3.54	3.15	8.03	10.81	10.14	21°	0.51	4.76
	mm	160 CF	202.5	204.0	294.0	90	80	204.0	274.5	257.5	21°	10.0	150.0
	in.		7.97	8.03	11.57	3.54	3.15	8.03	10.81	10.14	16°	0.39	5.91
MAG W 700 iP	mm	200 ISO-K	240.0	204.0	280.5	90	80	240.0	292.5	275.5	21°	13.0	130.0
	in.		9.45	8.03	11.04	3.54	3.15	9.45	11.52	10.85	21°	0.51	5.12
	mm	200 CF	253.0	204.0	275.0	90	80	253.0	299.0	282.0	21°	9.0	156.0
	in.		9.96	8.03	10.83	3.54	3.15	9.96	11.77	11.10	21°	0.35	6.14

b* = width with plug of the DRIVE/BEARING cable connected instead of MAG.DRIVE iS

Dimensional drawing for the TURBOVAC MAG W 600/700 iP

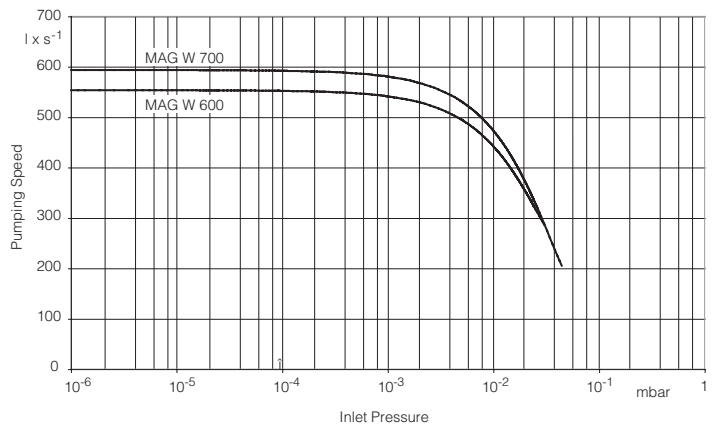

Pumping speed for N_2 of the TURBOVAC MAG W 600/700 iP as a function of the inlet pressure

Typical Applications

- Gas analysis systems
- Particle accelerators
- Electron microscopes
- Research
- Coating systems

Technical Features

- Installation in any orientation
- DN 160 or 200 ISO-K and/or CF high vacuum connection
- DN 25 ISO-KF with clamped fore-vacuum connection
- Purge gas/venting connection DN 16 ISO-KF with clamped connection (purge/vent)
- Water or air cooling optional
- 2 slots for industrial communications modules
  - Standard 9 pin 24 V SPS PLC-IO in Control Slot
  - RS 232 C in Service Slot
  - further interfaces can be fitted: Profibus, RS 485 C, DeviceNet, EtherNet IP, EtherCat

Advantages to the User

- Highest pumping speed from the smallest possible size
- New standard regarding maintenance-free systems
- Suitability for vibration sensitive applications in the area of analytical engineering, thin-film technology, electron microscopes, research, development among others
- Flexibility due to the modular concept; the converter is optionally also available by way of a bench top unit

Technical Data

		TURBOVAC MAG			
		W 600 iP		W 700 iP	
Inlet flange	DN	160 ISO-K	160 CF	200 ISO-K	200 CF
Pumping speed					
N_2	l/s	550	550	590	590
Ar	l/s	520	520	540	540
He	l/s	570	570	600	600
H_2	l/s	410	410	430	430
Operating speed	min^{-1}	48 000	48 000	48 000	48 000
Compression ratio					
N_2		1.6×10^{10}	1.6×10^{10}	1.6×10^{10}	1.6×10^{10}
H_2		3.4×10^{4}	3.4×10^{4}	3.4×10^{4}	3.4×10^{4}
He		1.7×10^{6}	1.7×10^{6}	1.7×10^{6}	1.7×10^{6}
Ultimate pressure	mbar	$< 10^{-8}$	$< 10^{-10}$	$< 10^{-8}$	$< 10^{-10}$
	(Torr)	($< 0.75 \times 10^{-8}$)	($< 0.75 \times 10^{-10}$)	($< 0.75 \times 10^{-8}$)	($< 0.75 \times 10^{-10}$)
Max. degassing temperature	°C (°F)	–	80 (176)	–	80 (176)
Max. foreline pressure for N_2	mbar (Torr)	6.0 (4.5)	6.0 (4.5)	6.0 (4.5)	6.0 (4.5)
Recommended backing pump		TRIVAC D 2,5 E TRIVAC D 8 B	TRIVAC D 2,5 E TRIVAC D 8 B	TRIVAC D 2,5 E TRIVAC D 8 B	TRIVAC D 2,5 E TRIVAC D 8 B
Run-up time	min	< 6	< 6	< 6	< 6
Foreline flange (clamped)	DN	25 ISO-KF	25 ISO-KF	25 ISO-KF	25 ISO-KF
Purge / vent port (clamped)	DN	16 ISO-KF	16 ISO-KF	16 ISO-KF	16 ISO-KF
Water cooling connection (optional)	G	1/8"	1/8"	1/8"	1/8"
Weight, approx.	kg (lbs)	17 (37.5)	17 (37.5)	17 (37.5)	17 (37.5)

Technical Data

		Integrated Frequency Converter TURBO.DRIVE iS			
Power supply	V	48	48	48	48
Ripple	%	< 2	< 2	< 2	< 2
Power consumption					
maximum	W	400	400	400	400
at ultimate pressure	W	259	259	259	259
DC current consumption, max.	A	7.5 to 9.3	7.5 to 9.3	7.5 to 9.3	7.5 to 9.3
DC power supply voltage range	V	43 to 53	43 to 53	43 to 53	43 to 53
Length of the DC connection cable, max.					
at 3 x 1.5 mm^2	m (ft)	5 (17.5)	5 (17.5)	5 (17.5)	5 (17.5)
at 3 x 2.5 mm^2	m (ft)	20 (70.0)	20 (70.0)	20 (70.0)	20 (70.0)
Contact rating for the relays, max.		32 V; 0.5 A	32 V; 0.5 A	32 V; 0.5 A	32 V; 0.5 A
Permissible ambient temperature					
during operation	°C	+10 to +40	+10 to +40	+10 to +40	+10 to +40
	(°F)	(+50 to +104)	(+50 to +104)	(+50 to +104)	(+50 to +104)
during storage	°C	0 to +60	0 to +60	0 to +60	0 to +60
	(°F)	(0 to +140)	(0 to +140)	(0 to +140)	(0 to +140)
Relative humidity of the air, non-condensing	%	5 to 85	5 to 85	5 to 85	5 to 85
Protection class	IP	30	30	30	30
Overvoltage category		II	II	II	II
Pollution category		2	2	2	2

TURBOVAC MAG W 600 iP with Integrated Frequency Converter and Seal Gas Connection	P FC	Part No.
DN 160 ISO-K		410600V0505
DN 160 CF		410600V0506
TURBOVAC MAG W 700 iP with Integrated Frequency Converter and Seal Gas Connection	P FC	
DN 200 ISO-K		410700V0505
DN 200 CF		410700V0506

Mandatory Accessories	P FC	
Power supply TURBO.POWER 501		410300V5221
DC cable frequency converter – power supply		
1 m (3.5 ft)		410300V2001
3 m (10.5 ft)		410300V2003
5 m (17.5 ft)		410300V2005
10 m (35.0 ft)		410300V2010
20 m (70.0 ft)		410300V2020
Mains cable, 3 m (10.5 ft)		
with EURO plug		800102V0002
with US plug 5-15 P		800102V1002
Forevacuum pump		
TRIVAC D 2,5 E		
220 – 240 V, 50 Hz; 230 V, 60 Hz; Schuko plug, EURO version		140 000
110 – 120 V, 50/60 Hz; NEMA plug, US version		140 002
TRIVAC D 8 B		
1 phase motor; 230 V, 50/60 Hz		112 55
3 phase motor; 230/400 V, 50 Hz; 250/440 V, 60 Hz		112 56

With integrated Frequency Converter

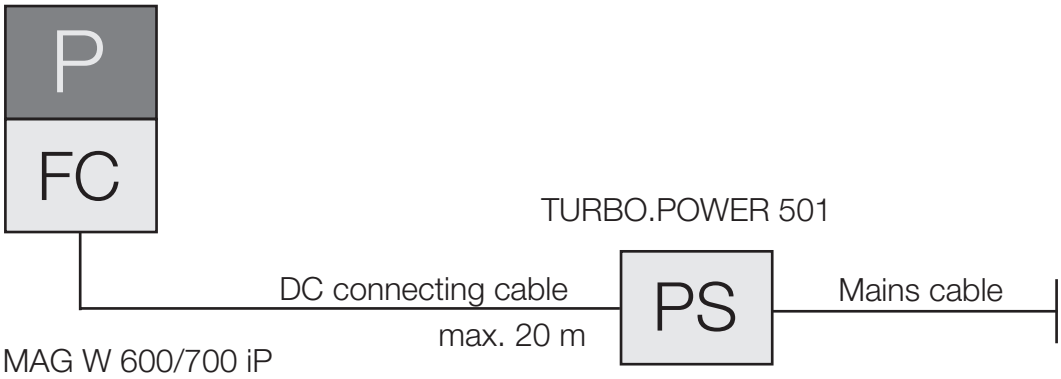

Ordering Information **TURBOVAC MAG W 600/700 iP**

Accessories, optional P	Part No.
Inlet screen	
DN 160 ISO-K	**E 200 00 307**
DN 160 CF	**E 200 17 247**
DN 200 ISO-K	**200 91 639**
DN 200 CF	**400 001 515**
Flange heater	
160 CF, 230 V, 50 Hz	**854 37**
160 CF, 115 V, 60 Hz	**854 38**
Water cooling unit	**410600V0101**
Air cooling unit	**410600V0102**
START/STOP switch for manual operation of the turbomolecular pump	**152 48**
DC plug	**800 001 694**
Solenoid venting valve, normally closed	
24 V DC, DN 16 ISO-KF	**800120V0011**
Power failure venting valve, normally open	**800120V0021**
Included in the Delivery of the Pump P	
Flanges for forevacuum, venting and purge gas are blank-flanged	
Centering ring with FPM sealing ring and a clamping yoke	

MAG INTEGRA – Magnetic Rotor Suspension with integrated Frequency Converter, with and without Compound Stage

TURBOVAC MAG W 1300 iP(L) to 2201 iP(L)

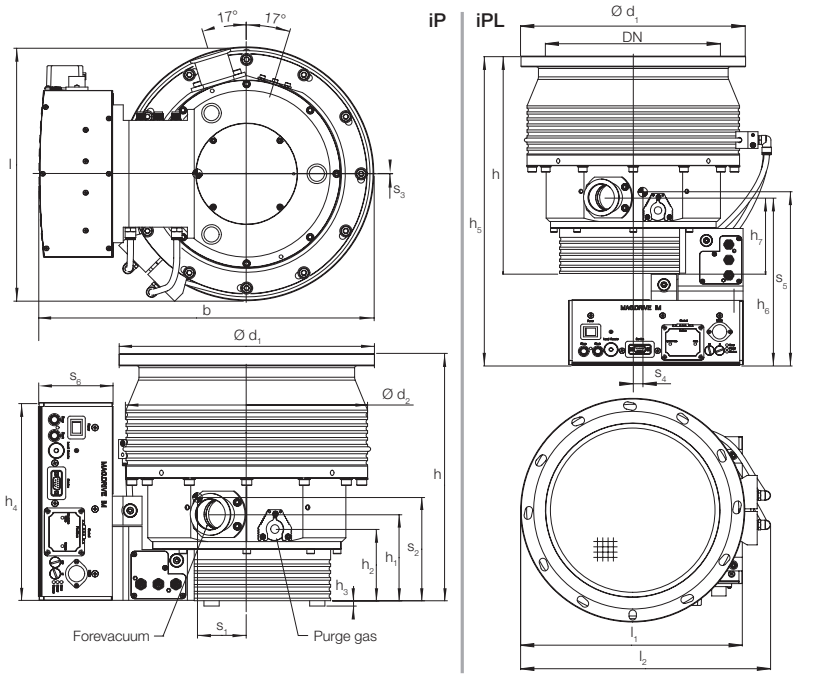

Type	DN		b	d_1	d_2	h	h_1	h_2	h_3	h_4	h_5	h_6
MAG W 1300	200 ISO-F	mm	420 [1]	285	285	305	114	94	7	260	442	251
		in.	16.54 [1]	11.22	11.22	12.01	4.49	3.70	0.38	10.24	17.40	9.88
	200 CF	mm	416	254	285	335	114	94	7	260	472	251
		in.	16.38	10.00	11.22	13.19	4.49	3.70	0.38	10.24	18.58	9.88
MAG W 1600/1601/1700	250 ISO-F	mm	442	335	317	325	114	94	7	260	463	251
		in.	17.40	13.19	12.48	12.80	4.49	3.70	0.38	10.24	18.23	9.88
	250 CF	mm	432	305	317	330	114	94	7	260	467	251
		in.	17.01	12.01	12.48	12.99	4.49	3.70	0.38	10.24	18.39	9.88
MAG W 2200/2201	250 ISO-F	mm	450	335	349	355	114	94	7	260	492	251
		in.	17.18	13.19	13.74	13.19	4.49	3.70	0.38	10.24	19.37	9.88
	250 CF	mm	446	305	349	372	114	94	7	260	506	251
		in.	17.56	12.01	13.74	14.65	4.49	3.70	0.38	10.24	19.92	9.88

			h_7	l	l_1	l_2	s_1	s_2	s_3	s_4	s_5	s_6
MAG W 1300	200 ISO-F	mm	114	311 [1]	311 [1]	332 [1]	42	140	0	15	241	98
		in.	4.49	12.24 [1]	12.24 [1]	13.07 [1]	1.65	5.51	0	0.59	9.49	3.86
	200 CF	mm	114	307	307	–	32	164	0	–	–	98
		in.	4.49	12.09	12.09	–	1.26	6.46	0	–	–	3.86
MAG W 1600/1601/1700	250 ISO-F	mm	114	335	331	374	39	154	0	14	259	98
		in.	4.49	13.19	12.24	14.72	1.54	6.06	0	0.55	10.20	3.86
	250 CF	mm	114	335	322	–	29	173	0	9	285	98
		in.	4.49	13.19	12.68	–	1.14	6.81	0	0.35	11.22	3.86
MAG W 2200/2201	250 ISO-F	mm	114	343	340	392	34	165	0	12	272	98
		in.	4.49	13.50	13.39	15.43	1.34	6.50	0	0.47	10.71	3.86
	250 CF	mm	114	339	340	–	26	187	0	8	302	98
		in.	4.49	13.35	13.39	–	1.02	7.36	0	0.32	11.89	3.86

[1] 4 mm (0.16 in.) for cooling coil

Dimensional drawing for the MAG INTEGRA, dimensions in mm

Typical Applications

- PVD coatings systems
- Coating of architectural glass
- Optical coatings
- LC displays
- Flat panels
- Research
- Analytical systems

Technical Features

- Installation in any orientation
- DN 200 and/or 250 in ISO-F and/or CF high vacuum connection
- DN 40 KF forevacuum connection
- Purge gas/venting connection DN 16 KF with clamped connection (purge/vent)
- Water cooling
- Protection class IP 54
- RS 232 C in Service Slot
- 1 slot for industrial communications modules
  - Standard ProfiBus
  - further interfaces can be fitted: RS 485 C, 9 pin 24 V PLC, DeviceNet, EtherNet IP, EtherCat

Advantages to the User

- Highest pumping speed and gas throughput from a very small size
- Rugged and reliable operation in industrial applications
- Sets new benchmarks for maintenance-free systems
- Suited for vibration sensitive applications in the areas of analytical, thin-film, electron microscopy, research and development among others.
- Flexibility through the modular concept; the converter is either attached to the side or under the pump

Technical Data

		TURBOVAC MAG W					
		1300 iP(L)	1600 iP(L) Booster	1601 iP(L) Booster	1700 iP(L)	2200 iP(L)	2201 iP(L)
Inlet flange	DN	200 ISO-F 200 CF	250 ISO-F	250 ISO-F	250 ISO-F 250 CF	250 ISO-F 250 CF	250 ISO-F
Pumping speed							
N_2	l/s	1100	1600	1600	1610	2100	2100
Ar	l/s	1050	1470	1470	1480	1900	1900
He	l/s	1220	1770	1770	1710	2050	2050
H_2	l/s	1130	1570	1570	1500	1750	1750
Operating speed							
standby speed adjustable from	min^{-1}	37 800	33 000	33 000	33 000	30 600	30 000
to nominal speed	min^{-1}	13 800 (230 Hz)	13 800 (230 Hz)	13 800 (230 Hz)	13 800 (230 Hz)	13 800 (230 Hz)	13 800 (230 Hz)
Max. compression ratiop							
N_2		$> 10^8$	$> 10^7$	$> 10^7$	$> 10^8$	$> 10^8$	$> 10^8$
Ar		$> 10^8$	$> 10^7$	$> 10^7$	$> 10^8$	$> 10^8$	$> 10^8$
He at 1 sccm		2×10^5	6×10^4	3×10^3	2×10^5	5×10^4	5×10^3
H_2 at 1 sccm		8×10^3	1×10^3	5×10^2	4×10^3	5×10^3	5×10^2
Max. gas throughput							
N_2 briefly, e.g. during pumpdown	mbar x l/s	30	60	60	30	30	50
N_2 in continuous operation	mbar x l/s	20	30	40	20	17	36
Ar briefly, e.g. during pumpdown	mbar x l/s	20	30	30	20	20	30
Ar in continuous operation	mbar x l/s	15	20	25	15	12	24
Ultimate pressure							
ISO-F flange	mbar (Torr)	$< 10^{-8}$ ($< 7.5 \times 10^{-9}$)	$< 10^{-8}$ ($< 7.5 \times 10^{-9}$)	$< 10^{-8}$ ($< 7.5 \times 10^{-9}$)	$< 10^{-8}$	$< 10^{-8}$	$< 10^{-8}$ ($< 7.5 \times 10^{-9}$)
CF flange	mbar (Torr)	$< 10^{-10}$ ($< 7.5 \times 10^{-11}$)	–	–	$< 10^{-10}$ ($< 7.5 \times 10^{-11}$)	$< 10^{-10}$ ($< 7.5 \times 10^{-11}$)	–
Max. degassing temperature	°C (°F)	80 (176)					
Max. foreline pressure							
N_2	mbar (Torr)	4.0 (3.00)	1.0 (0.75)	1.0 (0.75)	4.0 (3.00)	2.5 (1.9)	1.2 (0.91)
Ar	mbar (Torr)	0.6 (0.45)	1.0 (0.75)	1.0 (0.75)	0.6 (0.45)	2.5 (1.9)	1.2 (0.91)
Recommended backing pump		TRIVAC B or dry compressing pumps					
Run-up time	min	< 5	< 7	< 7	< 7	< 10	< 10
Foreline flange	DN	40 KF					
Purge / vent port (clamped)	DN	16 KF					
Water cooling connection	G	1/8“					
Weight, approx.	kg (lbs)	40 (88)	45 (99)	45 (99)	45 (99)	50 (110)	50 (110)
Noise level acc. ISO 3744	dB(A	< 41					
Vibration level at high vacuum flange at max. speed	µm	0.01					

Technical Data

		Integrated Frequency Converter MAG.DRIVE iM
Power supply	V	200 – 240 ±10%
Mains frequency	Hz	50 / 60
Power consumption		
maximum	W	750
at ultimate pressure	W	150
Contact rating for the relays, max.		32 V, 0.5 A
Permissible ambient temperature		
during operation	°C (°F)	+10 to +45 (+50 to +113)
during storage	°C (°F)	-10 to +60 (+14 to +140)
Relative humidity of the air, non-condensing	%	5 to 85
Protection class	IP	54
Overvoltage category		II
Pollution category		2

Ordering Information

TURBOVAC MAG W1300/1600/1601/ 1700/2200/2201 iP(L)

TURBOVAC MAG W 1300 with Integrated Frequency Converter and Purge Gas Connection	P FC PS	Part No.
MAG W 1300 iP, DN 200 ISO-F, Profibus		411300V0504
MAG W 1300 iP, DN 200 ISO-F, 24 V SPS interface		411300V0514
MAG W 1300 iP, DN 200 CF, Profibus		411300V0506
MAG W 1300 iP, DN 200 CF, 24 V SPS interface		411300V0516
MAG W 1300 iPL, DN 200 ISO-F, Profibus		411300V0704
MAG W 1300 iPL, DN 200 ISO-F, 24 V SPS interface		411300V0714
MAG W 1300 iPL, DN 200 CF, Profibus		411300V0706
MAG W 1300 iPL, DN 200 CF 24 V SPS interface		411300V0716

TURBOVAC MAG W 1600 Booster with Integrated Frequency Converter and Purge Gas Connection	P FC PS	Part No.
MAG W 1600 iP Booster, DN 250 ISO-F, Profibus		411600V0504
MAG W 1600 iP Booster, DN 250 ISO-F, 24 V SPS interface		411600V0514
MAG W 1600 iPL Booster, DN 250 ISO-F, Profibus		411600V0704
MAG W 1600 iPL Booster, DN 250 ISO-F, 24 V SPS interface		411600V0714

TURBOVAC MAG 1601 Booster with Integrated Frequency Converter and Purge Gas Connection	P FC PS	Part No.
MAG 1601 iP Booster, DN 250 ISO-F, Profibus		411600V2504
MAG 1601 iP Booster, DN 250 ISO-F, 24 V SPS interface		411600V2514
MAG 1601 iPL Booster, DN 250 ISO-F, Profibus		411600V2704
MAG 1601 iPL Booster, DN 250 ISO-F, 24 V SPS interface		411600V2714

TURBOVAC MAG W 1700 with Integrated Frequency Converter and Purge Gas Connection	P FC PS	Part No.
MAG W 1700 iP, DN 250 ISO-F, Profibus		411700V0504
MAG W 1700 iP, DN 250 ISO-F, 24 V SPS interface		411700V0514
MAG W 1700 iP, DN 250 CF, Profibus		411700V0506
MAG W 1700 iP, DN 250 CF, 24 V SPS interface		411700V0516
MAG W 1700 iPL, DN 250 ISO-F, Profibus		411700V0704
MAG W 1700 iPL, DN 250 ISO-F, 24 V SPS interface		411700V0714
MAG W 1700 iPL, DN 250 CF, Profibus		411700V0706
MAG W 1700 iPL, DN 250 CF, 24 V SPS interface		411700V0716

TURBOVAC MAG W 2200 with Integrated Frequency Converter and Purge Gas Connection	P FC PS	Part No.
MAG W 2200 iP, DN 250 ISO-F, Profibus		412200V0504
MAG W 2200 iP, DN 250 ISO-F, 24 V SPS interface		412200V0514
MAG W 2200 iP, DN 250 CF, Profibus		412200V0506
MAG W 2200 iP, DN 250 CF, 24 V SPS interface		412200V0516
MAG W 2200 iPL, DN 250 ISO-F, Profibus		412200V0704
MAG W 2200 iPL, DN 250 ISO-F, 24 V SPS interface		412200V0714
MAG W 2200 iPL, DN 250 CF, Profibus		412200V0706
MAG W 2200 iPL, DN 250 CF, 24 V SPS interface		412200V0716

TURBOVAC MAG 2201 Booster with Integrated Frequency Converter and Purge Gas Connection	P FC PS	Part No.
MAG 2201 iP, DN 250 ISO-F, Profibus		412200V2504
MAG 2201 iP, DN 250 ISO-F, 24 V SPS interface		412200V2514
MAG 2201 iPL, DN 250 ISO-F, Profibus		412200V2704
MAG 2201 iPL, DN 250 ISO-F, 24 V SPS interface		412200V2714

Other interfaces upon request

With integrated Frequency Converter and Power Supply

MAG W 1300 iP(L),
MAG W 1600/1601 iP(L) Booster,
MAG W 1700 iP(L),
MAG W 2200/2201 iP(L)

Ordering Information

	TURBOVAC MAG W1300/1600/1601/ 1700/2200/2201 iP(L)
Mandatory Accessories P	**Part No.**
Set of bolts, nuts and washers for ISO-F flange (12 each)	
Bolts M 10 x 50	**400153V0012**
Bolts M 10 x 35	**400153V0010**
Centering with O-ring	
Al/FPM	
DN 200	**268 44**
DN 250	**268 45**
Stainless steel/FPM	
DN 200	**887 02**
DN 250	**887 08**
Set of bolts, nuts and washers for CF flange (8 each)	
Bolts M 8 x 40	**400153V0016**
(For DN 200, 3 sets are required; for DN 250, 4 sets)	
Copper gasket rings for CF flange	
DN 200 (Set of 10 pieces)	**839 47**
DN 250 (Set of 5 pieces)	**839 48**
Set of hex. bolts with nuts, bolts and washers for CF flange	
DN 200	**839 07**
DN 250 (2 sets required)	**839 07**
Accessories, optional P FC PS	
Mains cable, 2.5 m (8.75 ft)	
with EURO plug	**411310V03**
with US plug	**411320V03**
Seal Kit DN 250 Metal	**200 07 901**
Seal kit, metal, for other flanges	**upon request**
Purge gas and venting valve 24 V DC	
0.6 mbar·l/s at 1.5 to 6 bar	**121 33**
0.6 mbar·l/s at 1 to 1.5 bar	**800152V0010**
Cable set (2 pieces) for connection to the pump	**411300V01**
Cooling water valve kit	**411300V02**
Spare Parts	
Inlet screen	
DN 200 ISO-F and DN 200 CF	**E 200 04 558**
DN 250 ISO-F and DN 250 CF	**E 200 04 557**
Included in the Delivery of the Pump P	
Flanges for forevacuum, venting and purge gas are blank-flanged	
Converter-side mains plug (IP 54)	
Inlet screen	

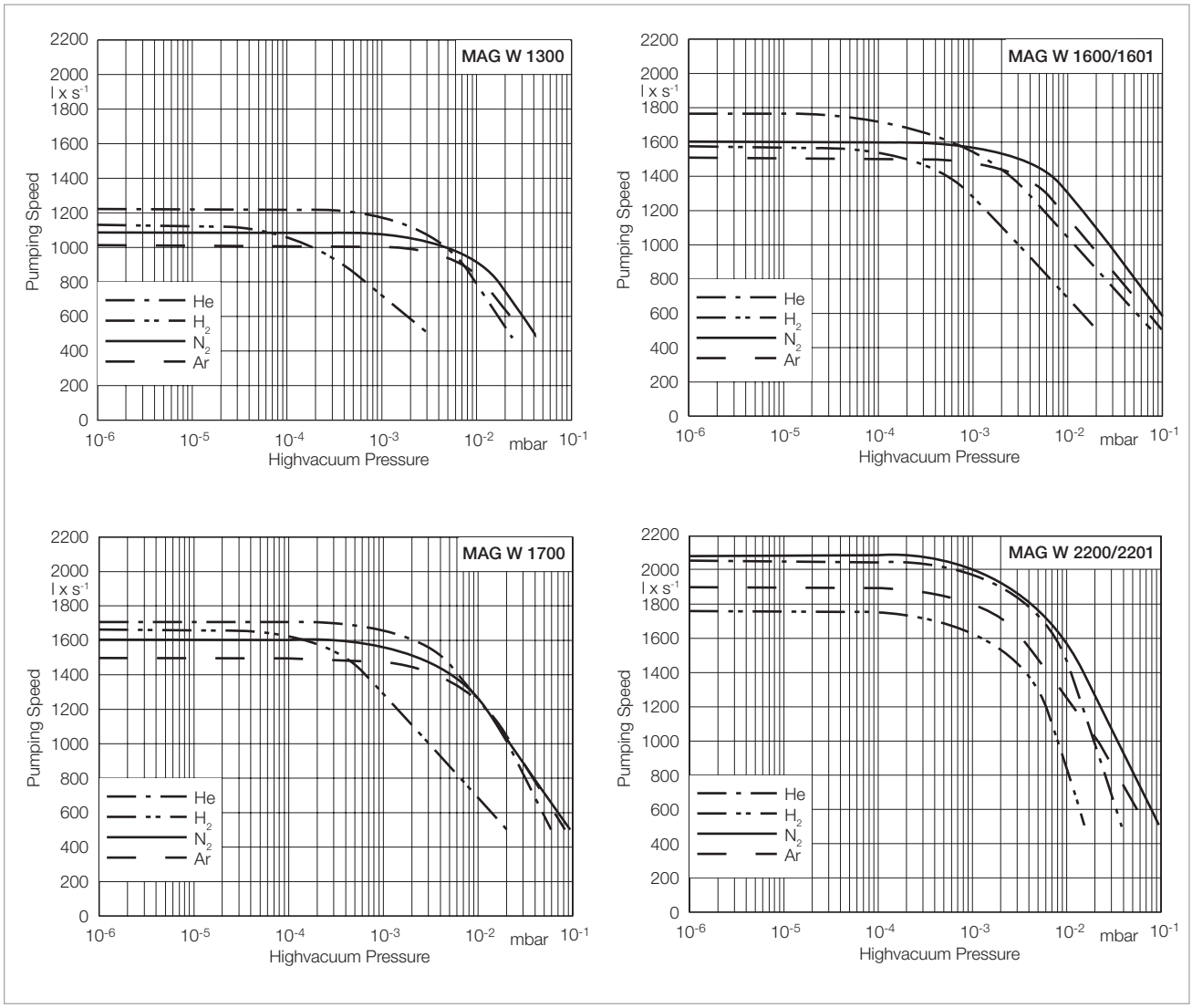

Pumping speed curves of the MAG W 1300, W 1600, W 1700 and W 2200

Notes

MAG INTEGRA – Magnetic Rotor Suspension with separate Frequency Converter, with Compound Stage

TURBOVAC MAG W 300/400 P

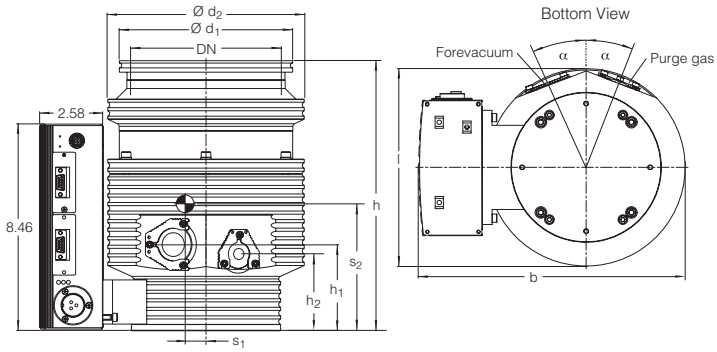

	DN		Ø d_1	Ø d_2	h	h_1	h_2	l	b	b*	α	s_1	s_2
MAG W 300 P	100 ISO-K	mm	130.0	155.0	250.0	77.7	70.0	156.0	250.0	233.0	16°	19.0	103.0
		in.	5.12	6.10	9.84	3.06	2.76	6.14	9.84	9.17	16°	0.75	4.06
	100 CF	mm	151.5	155.0	264.3	77.7	70.0	156.0	250.0	233.0	16°	15.0	129.0
		in.	5.97	6.10	10.41	3.06	2.76	6.14	9.84	9.17	16°	0.59	5.08
MAG W 400 P	160 ISO-K	mm	180.0	155.0	241.0	77.7	70.0	168.5	262.5	245.5	16°	19.0	106.0
		in.	7.09	6.10	9.49	3.06	2.76	6.63	10.34	9.67	16°	0.75	4.17
	160 CF	mm	202.5	155.0	234.7	77.7	70.0	181.2	273.7	256.7	16°	14.0	129.0
		in.	7.97	6.10	9.24	3.06	2.76	7.13	10.78	10.11	16°	0.55	5.08

b* = width with plug of the DRIVE/BEARING cable connected instead of MAG.DRIVE iS

Dimensional drawing for the TURBOVAC MAG W 300/400 P

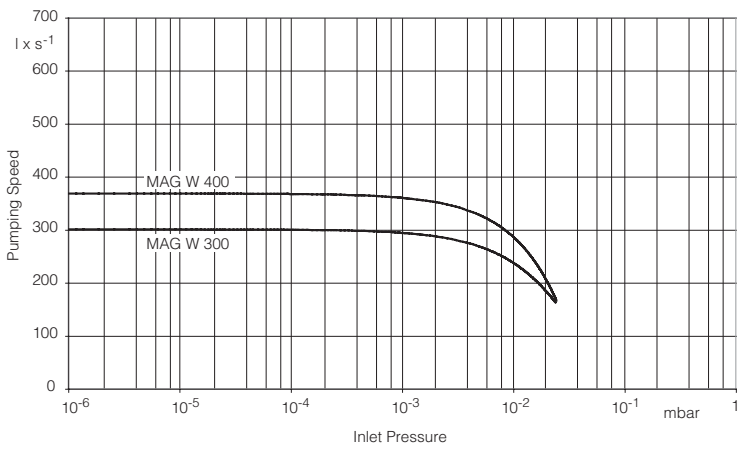

Pumping speed for N_2 of the TURBOVAC MAG W 300/400 P as a function of the inlet pressure

Typical Applications

- Gas analysis systems
- Particle accelerators
- Electron microscopes
- Research
- Coating systems

Technical Features

- Installation in any orientation
- DN 100 or 160 ISO-K and/or CF high vacuum connection
- DN 16 ISO-KF with clamped forevacuum connection
- Purge gas/venting connection DN 16 ISO-KF with clamped connection (purge/vent)
- Water or air cooling optional

Advantages to the User

- Highest pumping speed from the smallest possible size
- New standard regarding maintenance-free systems
- Suitability for vibration sensitive applications in the area of analytical engineering, thin-film technology, electron microscopes, research, development among others
- Flexibility due to the modular concept; alternatively the pump is available also with an integrated frequency converter

Technical Data

TURBOVAC MAG

		W 300 P		W 400 P	
Inlet flange	DN	100 ISO-K	100 CF	160 ISO-K	160 CF
Pumping speed					
N_2	l/s	300	300	365	365
Ar	l/s	260	260	330	330
He	l/s	260	260	280	280
H_2	l/s	190	190	200	200
Operating speed	min^{-1}	58 800	58 800	58 800	58 800
Compression ratio					
N_2		1.0×10^{10}	1.0×10^{10}	1.0×10^{10}	1.0×10^{10}
H_2		3.2×10^{3}	3.2×10^{3}	3.2×10^{3}	3.2×10^{3}
He		9.2×10^{4}	9.2×10^{4}	9.2×10^{4}	9.2×10^{4}
Ultimate pressure	mbar (Torr)	$< 10^{-8}$ ($< 0.75 \times 10^{-8}$)	$< 10^{-10}$ ($< 0.75 \times 10^{-10}$)	$< 10^{-8}$ ($< 0.75 \times 10^{-8}$)	$< 10^{-10}$ ($< 0.75 \times 10^{-10}$)
Max. degassing temperature	°C (°F)	–	80 (176)	–	80 (176)
Max. foreline pressure for N_2	mbar (Torr)	8 (6)	8 (6)	8 (6)	8 (6)
Recommended backing pump		TRIVAC D 2,5 E TRIVAC D 8 B	TRIVAC D 2,5 E TRIVAC D 8 B	TRIVAC D 2,5 E TRIVAC D 8 B	TRIVAC D 2,5 E TRIVAC D 8 B
Run-up time	min	< 5	< 5	< 5	< 5
Foreline flange (clamped)	DN	16 ISO-KF	16 ISO-KF	16 ISO-KF	16 ISO-KF
Purge / vent port (clamped)	DN	16 ISO-KF	16 ISO-KF	16 ISO-KF	16 ISO-KF
Water cooling connection (optional)	G	1/8"	1/8"	1/8"	1/8"
Weight, approx.	kg (lbs)	12 (26)	12 (26)	12 (26)	12 (26)

Technical Data

MAG.DRIVE S

Voltage range	V	100 – 240, ±10 %
Nominal frequency	Hz	50 / 60
Power consumption		
stand-by	W	100
maximum	W	400
Max. motor voltage	V	48
Max. pump current	A	6
Fuses F1, F2 5 x 20 mm		10 A fast blow high breaking capacity 250 V
System fuse		L or G characteristic
Max. frequency	Hz	0 to 2000
Load capability, relay output X1	V / A	32 / 0,5
Temperature		
during operation	°C (°F)	0 to +45 (+32 to +113)
during storage	°C (°F)	-10 to +60 (+14 to +140)
Relative humidity of the air	%	95 (non-condensing)

TURBOVAC MAG W 300 P with separate Frequency Converter and Compound Stage	P	Part No.
DN 100 ISO-K		410300V0005
DN 100 CF		410300V0006
TURBOVAC MAG W 400 P with separate Frequency Converter and Compound Stage	**P**	
DN 160 ISO-K		410400V0005
DN 160 CF		410400V0006
Mandatory Accessories	**P FC**	
Electronic frequency converter		
MAG.DRIVE S with display		410300V0212
Connecting cable DRIVE/BEARING		
(connection between pump and MAG.DRIVE S)		
3.0 m (10.5 ft)		410300V4003
5.0 m (17.5 ft)		410300V4005
10.0 m (35.0 ft)		410300V4010
20.0 m (70.0 ft)		410300V4020
Mains cable		
3.0 m (10.5 ft)		
EURO plug		800102V0002
US plug 5-15 P		800102V1002
2.0 m (7.5 ft)		
US plug 115 V AC		992 76 513
Forevacuum pump		
TRIVAC D 2,5 E		
220 – 240 V, 50 Hz; 230 V, 60 Hz; Schuko plug, EURO version		140 000
110 – 120 V, 50/60 Hz; NEMA plug, US version		140 002
TRIVAC D 8 B		
1 phase motor; 230 V, 50/60 Hz		112 55
3 phase motor; 230/400 V, 50 Hz; 250/440 V, 60 Hz		112 56

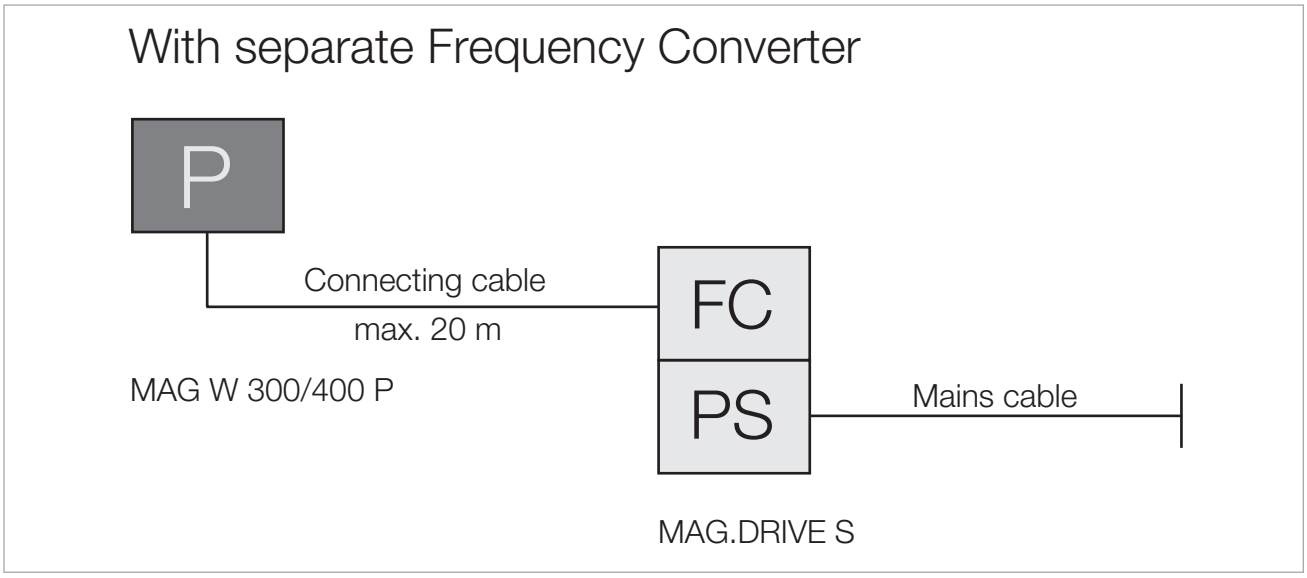

Ordering Information

TURBOVAC MAG W 300/400 P

Accessories, optional P	Part No.
Inlet screen	
DN 100 ISO-K	
coarse (3.2 x 3.2 mm (0.13 x 0.13 in.)	**800132V0101**
fine (1.6 x 1.6 mm (0.06 x 0.06 in.))	**800132V0102**
DN 100 CF	
coarse (3.2 x 3.2 mm (0.13 x 0.13 in.))	**200 91 514**
fine (1.6 x 1.6 mm (0.06 x 0.06 in.))	**E 200 17 195**
DN 160 ISO-K	**E 200 00 307**
DN 160 CF	**E 200 17 247**
Flange heater	
100 CF, 230 V, 50 Hz	**854 27**
100 CF, 115 V, 60 Hz	**854 28**
160 CF, 230 V, 50 Hz	**854 37**
160 CF, 115 V, 60 Hz	**854 38**
Water cooling unit	**410300V0101**
Air cooling unit	**410300V0102**
Solenoid venting valve, normally closed	
24 V DC, DN 16 ISO-KF	**800120V0011**
Power failure venting valve, normally open	**800120V0021**
Included in the Delivery of the Pump P	
Flanges for forevacuum, venting and purge gas are blank-flanged	
Centering ring with FPM sealing ring and a clamping yoke	

MAG INTEGRA – Magnetic Rotor Suspension with separate Frequency Converter, with Compound Stage

TURBOVAC MAG W 600/700 P

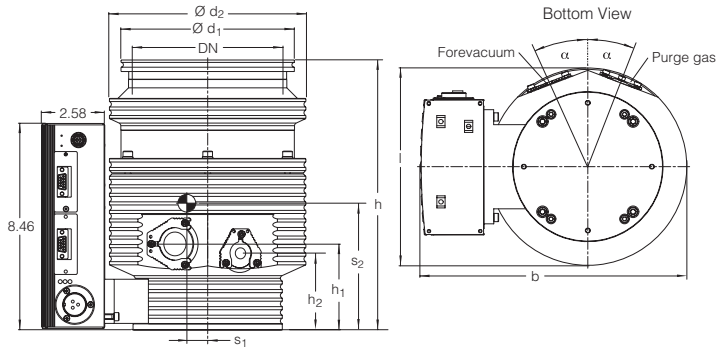

		DN	ø d_1	ø d_2	h	h_1	h_2	l	b	b*	α	s_1	s_2
MAG W 600 P	mm	160 ISO-K	180.0	204.0	281.5	90	80	204.0	274.5	257.5	21°	13.0	121.0
	in.		7.09	8.03	11.08	3.54	3.15	8.03	10.81	10.14	21°	0.51	4.76
	mm	160 CF	202.5	204.0	294.0	90	80	204.0	274.5	257.5	21°	10.0	150.0
	in.		7.97	8.03	11.57	3.54	3.15	8.03	10.81	10.14	21°	0.39	5.91
MAG W 700 P	mm	200 ISO-K	240.0	204.0	280.5	90	80	240.0	292.5	275.5	21°	13.0	130.0
	in.		9.45	8.03	11.04	3.54	3.15	9.45	11.52	10.85	21°	0.51	5.12
	mm	200 CF	253.0	204.0	275.0	90	80	253.0	299.0	282.0	21°	9.0	156.0
	in.		9.96	8.03	10.83	3.54	3.15	9.96	11.77	11.10	21°	0.35	6.14

b* = width with plug of the DRIVE/BEARING cable connected instead of MAG.DRIVE iS

Dimensional drawing for the TURBOVAC MAG W 600/700 P

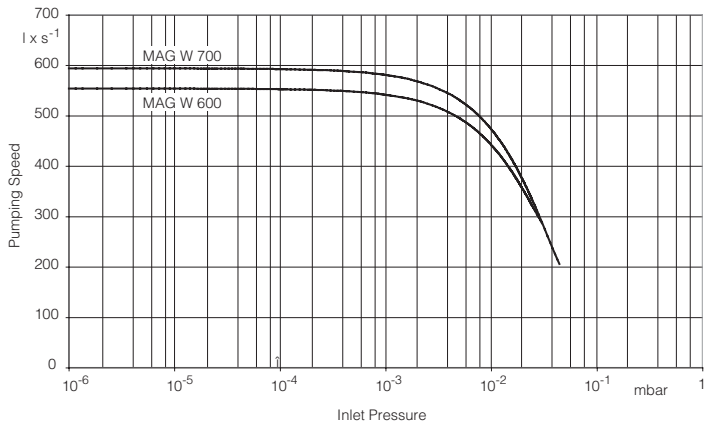

Pumping speed for N_2 of the TURBOVAC MAG W 600/700 P as a function of the inlet pressure

Typical Applications

- Gas analysis systems
- Particle accelerators
- Electron microscopes
- Research
- Coating systems

Technical Features

- Installation in any orientation
- DN 160 or 200 ISO-K and/or CF high vacuum connection
- DN 25 ISO-KF with clamped forevacuum connection
- Purge gas/venting connection DN 16 ISO-KF with clamped connection (purge/vent)
- Water or air cooling optional

Advantages to the User

- Highest pumping speed from the smallest possible size
- New standard regarding maintenance-free systems
- Suitability for vibration sensitive applications in the area of analytical engineering, thin-film technology, electron microscopes, research, development among others
- Flexibility due to the modular concept; alternatively the pump is available also with an integrated frequency converter

Technical Data

TURBOVAC MAG

		W 600 P		W 700 P	
Inlet flange	DN	160 ISO-K	160 CF	200 ISO-K	200 CF
Pumping speed					
N_2	l/s	550	550	590	590
Ar	l/s	520	520	540	540
He	l/s	570	570	600	600
H_2	l/s	410	410	430	430
Operating speed	min^{-1}	48 000	48 000	48 000	48 000
Compression ratio					
N_2		1.6×10^{10}	1.6×10^{10}	1.6×10^{10}	1.6×10^{10}
H_2		3.4×10^{4}	3.4×10^{4}	3.4×10^{4}	3.4×10^{4}
He		1.7×10^{6}	1.7×10^{6}	1.7×10^{6}	1.7×10^{6}
Ultimate pressure	mbar (Torr)	$< 10^{-8}$ ($< 0.75 \times 10^{-8}$)	$< 10^{-10}$ ($< 0.75 \times 10^{-10}$)	$< 10^{-8}$ ($< 0.75 \times 10^{-8}$)	$< 10^{-10}$ ($< 0.75 \times 10^{-10}$)
Max. degassing temperature	°C (°F)	–	80 (176)	–	80 (176)
Max. foreline pressure for N_2	mbar (Torr)	6.0 (4.5)	6.0 (4.5)	6.0 (4.5)	6.0 (4.5)
Recommended backing pump		TRIVAC D 2,5 E TRIVAC D 8 B	TRIVAC D 2,5 E TRIVAC D 8 B	TRIVAC D 2,5 E TRIVAC D 8 B	TRIVAC D 2,5 E TRIVAC D 8 B
Run-up time	min	< 6	< 6	< 6	< 6
Foreline flange (clamped)	DN	25 ISO-KF	25 ISO-KF	25 ISO-KF	25 ISO-KF
Purge / vent port (clamped)	DN	16 ISO-KF	16 ISO-KF	16 ISO-KF	16 ISO-KF
Water cooling connection (optional)	G	1/8"	1/8"	1/8"	1/8"
Weight, approx.	kg (lbs)	17 (37.5)	17 (37.5)	17 (37.5)	17 (37.5)

Technical Data

MAG.DRIVE S

Voltage range	V	100 – 240, ±10 %
Nominal frequency	Hz	50 / 60
Power consumption		
stand-by	W	100
maximum	W	400
Max. motor voltage	V	48
Max. pump current	A	6
Fuses F1, F2 5 x 20 mm		10 A fast blow high breaking capacity 250 V
System fuse		L or G characteristic
Max. frequency	Hz	0 to 2000
Load capability, relay output X1	V / A	32 / 0.5
Temperature		
during operation	°C (°F)	0 to +45 (+32 to +113)
during storage	°C (°F)	-10 to +60 (+14 to +140)
Relative humidity of the air	%	95 (non-condensing)

TURBOVAC MAG W 600 P with separate Frequency Converter and Compound Stage P	Part No.	
DN 160 ISO-K	410600V0005	
DN 160 CF	410600V0006	
TURBOVAC MAG W 700 P with separate Frequency Converter and Compound Stage P		
DN 200 ISO-K	410700V0005	
DN 200 CF	410700V0006	
Mandatory Accessories P FC		
Electronic frequency converter MAG.DRIVE S with display	410300V0212	
Connecting cable DRIVE/BEARING (connection between pump and MAG.DRIVE S)		
3.0 m (10.5 ft)	410300V4003	
5.0 m (17.5 ft)	410300V4005	
10.0 m (35.0 ft)	410300V4010	
20.0 m (70.0 ft)	410300V4020	
Mains cable		
3.0 m (10.5 ft)		
EURO plug	800102V0002	
US plug 5-15 P	800102V1002	
2.0 m (7.5 ft)		
US plug 115 V AC	992 76 513	
Forevacuum pump		
TRIVAC D 2,5 E		
220 – 240 V, 50 Hz; 230 V, 60 Hz; Schuko plug, EURO version	140 000	
110 – 120 V, 50/60 Hz; NEMA plug, US version	140 002	
TRIVAC D 8 B		
1 phase motor; 230 V, 50/60 Hz	112 55	
3 phase motor; 230/400 V, 50 Hz; 250/440 V, 60 Hz	112 56	

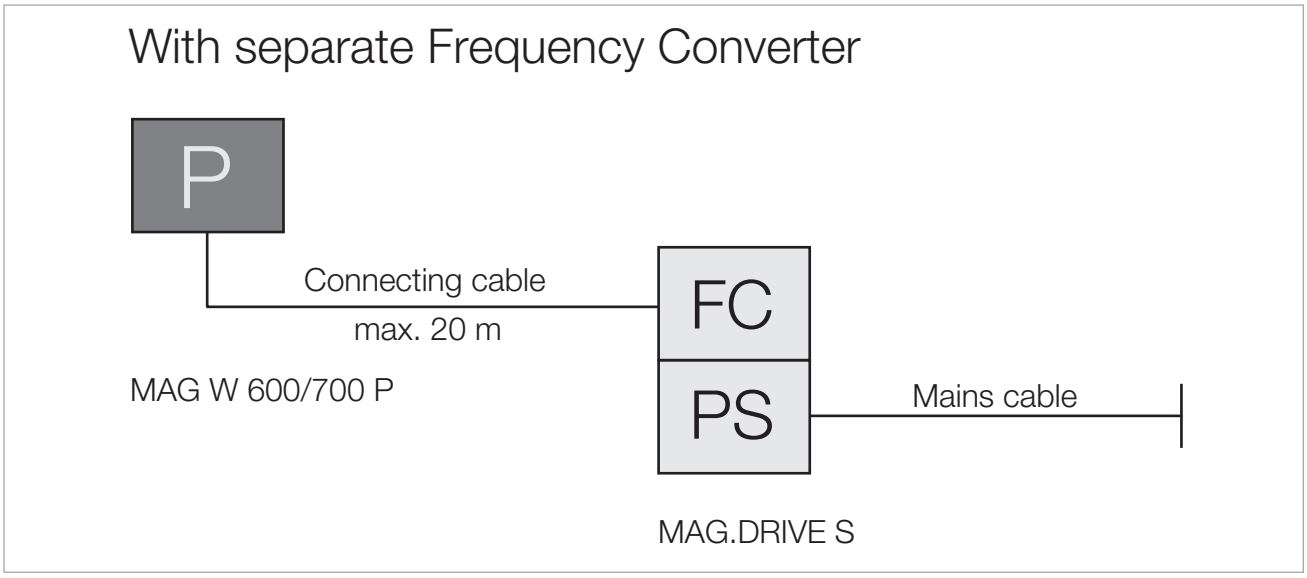

Ordering Information

TURBOVAC MAG W 600/700 P

Accessories, optional P	Part No.
Inlet screen	
DN 160 ISO-K	**E 200 00 307**
DN 160 CF	**E 200 17 247**
DN 200 ISO-K	**200 91 639**
DN 200 CF	**400 001 515**
Flange heater	
160 CF, 230 V, 50 Hz	**854 37**
160 CF, 115 V, 60 Hz	**854 38**
Water cooling unit	**410600V0101**
Air cooling unit	**410600V0102**
Solenoid venting valve, normally closed	
24 V DC, DN 16 ISO-KF	**800120V0011**
Power failure venting valve, normally open	**800120V0021**
Included in the Delivery of the Pump P	
Flanges for forevacuum, venting and purge gas are blank-flanged	
Centering ring with FPM sealing ring and a clamping yoke	

Accessories

Electronic Frequency Converters for Pumps with Magnetic Rotor Suspension

MAG.DRIVE S

MAG.DRIVE S with display

Advantages to the User

- Operation of turbomolecular pumps with magnetically levitated rotors: MAG W 300/400 P and MAG W 600/700 P
- Easy operation through the controls
- Communication to host computer of the customer via serial interface and conventional interface possible
- Setting of speed and other functions
- Warning in case the pump is running out of specification
- Storing of all parameters in the pump's memory
- Small size and low weight
- Integrated fan
- 2 slots for industrial communications modules
  - rear side: Standard 9 pin 24 V SPS PLC-IO in Control Slot
  - front side: RS 232 C in Service Slot
  - further interfaces can be fitted: Ethernet, Profibus, DeviceNet, RS 485 C

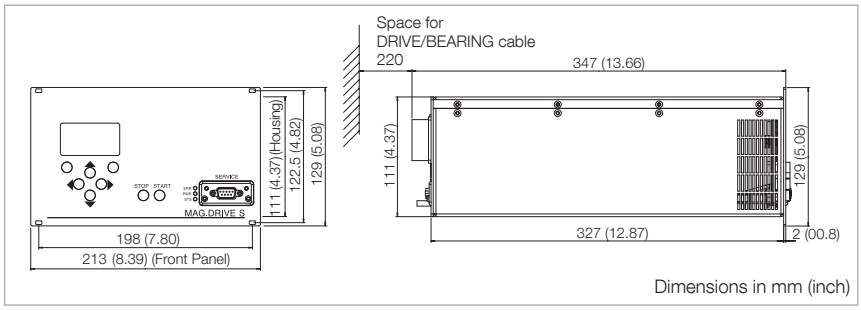

Dimensional drawing for the MAG.DRIVE S

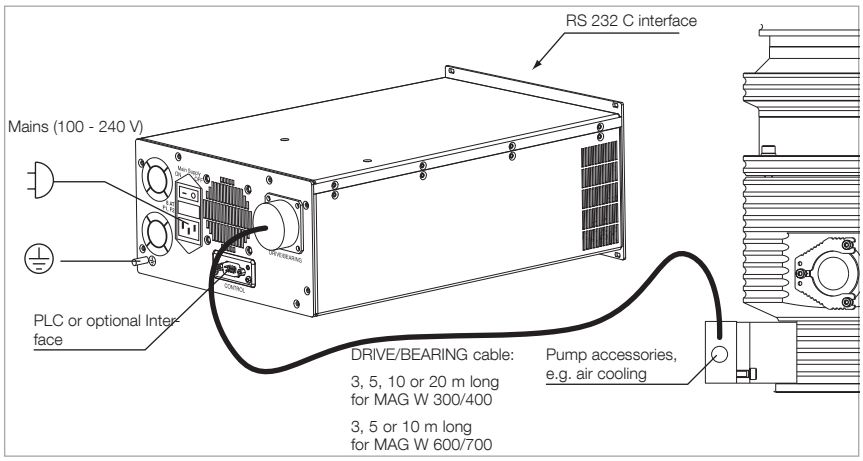

Connection schematic MAG.DRIVE S

Technical Data

MAG.DRIVE S

Voltage range	V	100 – 240, ±10%
Nominal frequency	Hz	50 / 60
Power consumption stand-by maximum	 W W	 100 400
Max. motor voltage	V	48
Max. pump current	A	6
Fuses F1, F2 5 x 20 mm		10 A fast blow high breaking capacity 250 V
System fuse		L or G characteristic
Max. frequency	Hz	0 to 2000
Load capability, relay output X1	V / A	32 / 0,5
Temperature during operation during storage	 °C (°F) °C (°F)	 0 to +45 (+32 to +113) -10 to +60 (+14 to +140)
Relative humidity of the air	%	95 (non-condensing)
Weight, approx.	kg (lbs)	65 (14.35)

Ordering Information

MAG.DRIVE S

	Part No.
Electronic frequency converter MAG.DRIVE S with display	**410300V0212**
Connecting cable DRIVE/BEARING (connection between pump and MAG.DRIVE S) 3.0 m (10.5 ft) 5.0 m (17.5 ft) 10.0 m (35.0 ft) [1] 20.0 m (70.0 ft) [1]	 **410300V4003** **410300V4005** **410300V4010** **410300V4020**
Mains cable 3.0 m (10.5 ft) EURO plug US plug 5-15 P 2.0 m (7.5 ft) US plug 115 V AC	 **800102V0002** **800102V1002** **992 76 513**

[1] Suited for operating the MAG W 300/400 only

Power Supply TURBO.POWER 501

for TURBOVAC MAG W 300/400/600/700 iP

TURBO.POWER 501 (Fig.similar)

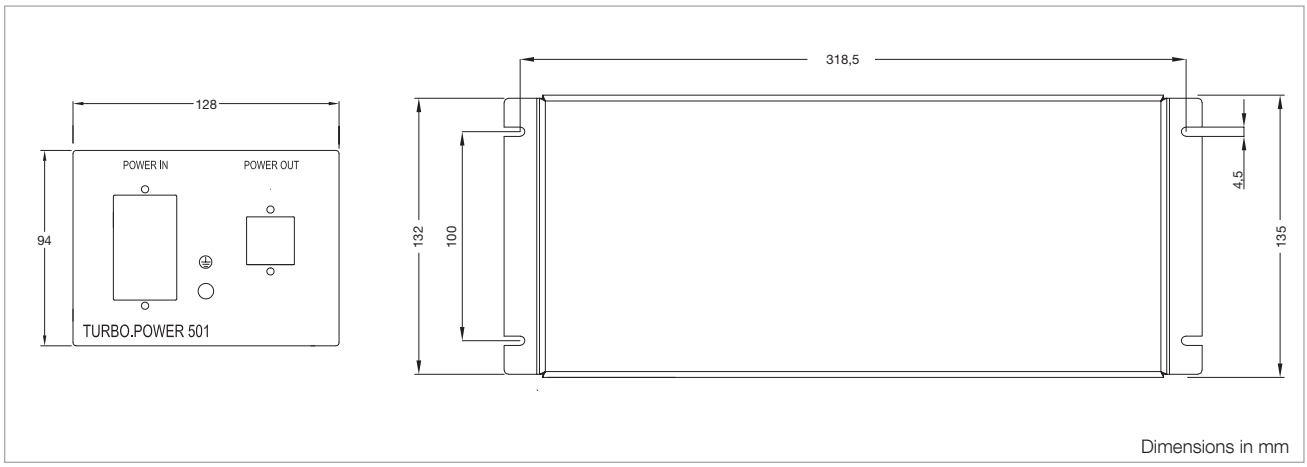

Dimensional drawing for the power supply TURBO.POWER 501

Technical Features

- For supplying 48 V DC power to the MAG W 300/400/600/700 iP
- Bench top unit or for cabinet mounting

Technical Data

		Power Supply TURBO.POWER 501
Power supply (POWER IN)	V	100 – 240, ±10%
Nominal frequency	Hz	50 / 60
Power consumption		
maximum	VA	650
at ultimate pressure operation of the pump	VA	450
DC voltage range		
POWER OUT	V DC	48
max.	A	10
Length of the DC connection cable, max.		
at 3 x 1.5 mm²	m (ft)	5 (17.5)
at 3 x 2.5 mm²	m (ft)	20 (70.0)
Ambient temperature		
during operation	°C (°F)	+10 to +40 (+50 to +104)
during storage	°C (°F)	-10 to -70 (+14 to -94)
Relative humidity of the air	%	5 to 85 (non-condensing)
Protection class	IP	30
Overvoltage category		II
Pollution category		2
Weight, approx.	kg (lbs)	4.0 (8.8)

Ordering Information

	Power Supply TURBO.POWER 501
	Part No.
Power supply TURBO.POWER 500	**410300V5221**
DC cable (connection between TURBO.POWER 500 and MAG.DRIVE iS)	
1.0 m (3.5 ft)	**410300V2001**
3.0 m (10.5 ft)	**410300V2003**
5.0 m (17.5 ft)	**410300V2005**
10.0 m (35.0 ft)	**410300V2010**
20.0 m (70.0 ft)	**410300V2020**
Mains cable	
3.0 m (10.5 ft)	
EURO plug	**800102V0002**
US plug 5-15 P	**800102V1002**
2.0 m (7.5 ft)	
US plug 115 V AC	**992 76 513**

Vibration Absorber

Vibration absorbers are used to inhibit the propagation of vibrations from the turbomolecular pump to highly sensitive instruments like electron beam microscopes, micro-balances or analytical instruments.

Ordering Information — Vibration Absorber

		Part No.
Vibration absorber		
DN 63 ISO-K	66 mm (2.60 in.) long	**800131V0063**
DN 63 CF	81 mm (3.19 in.) long	**500 070**
DN 100 ISO-K	84 mm (3.31 in.) long	**800131V0100**
DN 100 CF	100 mm (4.09 in.) long	**500 071**
DN 160 ISO-K	84 mm (3.31 in.) long	**500 073**
DN 160 CF	104 mm (4.09 in.) long	**500 072**

Flange Heater for CF High Vacuum Flanges

Most TURBOVAC pumps can be baked out in order to improve the ultimate pressure attained in the UHV range. Degassing of the turbomolecular pump will only be useful when simultaneously baking out the vacuum chamber.

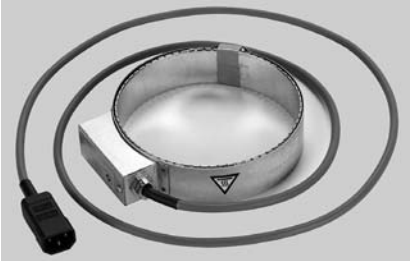

Technical Data — Flange Heater

Rated power consumption of the flange heater		
DN 63 CF, DN 100 CF	W	100
DN 160 CF	W	150
Voltage	V AC	230 or 115
Cable length	mm	1600
Max. temperature	°C	100

Ordering Information — Flange Heater

	Part No.	Part No.
Flange heater	230 V	115 V
DN 63 CF	**800137V0003**	**800137V0004**
DN 100 CF	**800137V0005**	**800137V0006**
DN 160 CF	**800137V0007**	**800137V0008**

Fine Filter

A fine filter integrated in the centering ring protects the pump against particles and dust on the high vacuum side.

Ordering Information — Fine Filter

	Part No.
Connection flange of the fine filter	
DN 40 ISO-KF	**883 98**
DN 63 ISO-K	**887 20**
DN 100 ISO-K	**887 21**

Solenoid Venting Valve

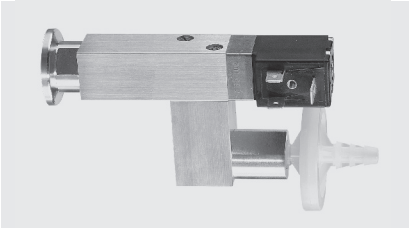

Technical Data — Venting Valve

Drive voltage	V DC	24
Power consumption	W	4
Connecting flange	DN	16 ISO-KF
Weight, approx.	kg (lbs)	0.3 (0.66)

Ordering Information — Venting Valve

	Part No.
Solenoid venting valve, normally closed	**800120V0011**

Power Failure Venting Valve

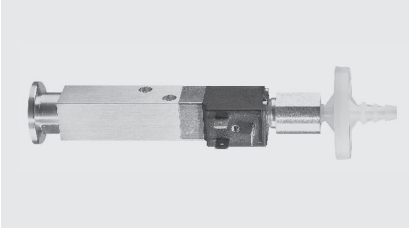

Technical Data — Power Failure Venting Valve

Drive voltage	V DC	24
Power consumption	W	4
Connecting flange	DN	16 ISO-KF
Weight, approx.	kg (lbs)	0.3 (0.66)

Ordering Information — Power Failure Venting Valve

	Part No.
Power failure venting valve, normally open	**800120V0021**

Power Failure Venting Valve, Electromagnetically Actuated

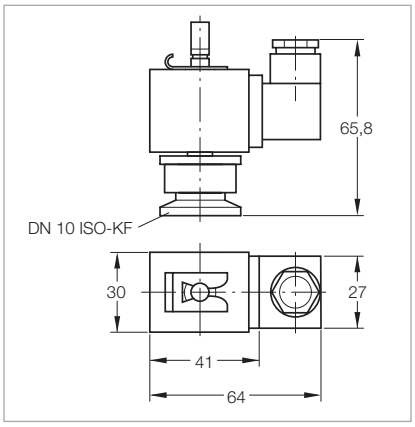

Dimensional drawing for the electromagnetically astuated power failure venting valve

Technical Data — Power Failure Venting Valve

Technical data	See Catalog “Valves”, para. “Special Valves”

Ordering Information — Power Failure Venting Valve

	Part No.
Power failure venting valve DN 10 ISO-KF, electromagnetically actuated	
24 V DC	**174 46**
230 V AC / 50/60 Hz	**174 26**

Purge Gas and Venting Valve

Technical Data		Purge Gas and Venting Valve
Connecting flange	DN	10 ISO-KF
Weight, approx.	kg (lbs)	0.7 (1.55)

Ordering Information	Purge Gas and Venting Valve
	Part No.
Purge gas and venting valve, 230 V	
0.2 mbar x l/s (12 sccm)	**855 19**
0.4 mbar x l/s (24 sccm)	**855 29**

Purge Gas and Venting Valve

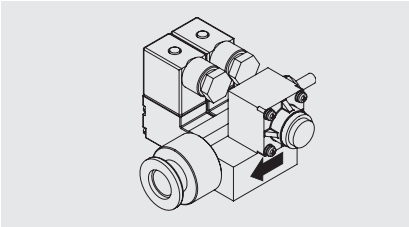

Technical Data		Purge Gas and Venting Valve
Connecting flange		
Inlet		1/4" tube
Outlet		pump specific or DN 16 ISO-KF
Purge gas pressure, abs.	bar	1.5 to 6,0
Weight, approx.	kg (lbs)	0.5 (1.1)

Ordering Information	Purge Gas and Venting Valve
	Part No.
Purge gas and venting valve, 24 V DC	
0.6 mbar x l/s	**121 33**

Further 0.6 mbar x l/s valves upon request

Gas Filter to G 1/4" for Purge Gas and Venting Valve

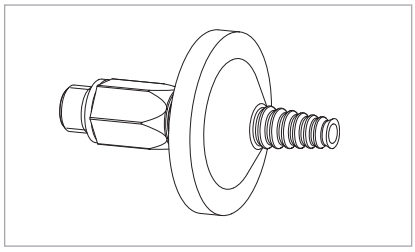

Technical Data	Gas Filter
Gasfilter including fitting G 1/4" and 2 gaskets	

Ordering Information	Gas Filter
	Part No.
Gas filter to G 1/4" for seal gas and venting valve	**800110V0012**
Replacement filter for gas filter to G 1/4" for seal gas and venting valve	**E 200 18 515**

Accessories for Serial Interfaces RS 232 C and RS 485 C

Through these accessories many control, monitoring and information capabilities can be implemented in connection with the electronic frequency converters and turbomolecular pumps.

All turbomolecular pumps or electronic frequency converters are supported.

PC Software LEYASSIST

Software for PC-based communication, control and monitoring of turbomolecular pumps via USB, RS 485 or RS 232 interface with automatic pump detection.

Functions

- Display of vacuum system status
- Configuring the accessory functions of the TURBOVAC i / iX
- Reading/writing of parameters
- Data logging
- Alarm/warning message logging

Ordering Information **PC Software LEYASSIST**

	Part No.
PC software LEYASSIST	**230439V01**

Interface Adaptor for Frequency Converter with RS 232 C/RS 485 C Interface

Ordering Information **Interface Adaptor RS 232 C/RS 485 C**

	Part No.
Adaptor RS 232 C/RS 485 C mains connection 230 V, 50 Hz, EURO plug	**800110V0101**
Adaptor USB/RS 232 C for connection of RS 232 C to USB (PC), including CD with drivers and manual	**800110V0103**

Services for Mechanically Suspended Turbomolecular Pumps

Complete Refurbishing at the Service Centre

Complete refurbishing at the service centre includes the following:
Complete disassembly, cleaning, replacement of all wearing parts, mounting, electrical safety test, final test including vibration measurement

Complete Refurbishing with Decontamination at the Service Centre

Complete refurbishing with decontamination at the service centre includes the following:
Complete disassembly, cleaning and decontamination, replacement of all wearing parts, mounting, electrical safety test, final test including vibration measurement

Ordering Information	Complete Refurbishing at the Service Centre	Complete Refurbishing with Decontamination at the Service Centre
	Part No.	Part No.
For pump		
TURBOVAC 35 / 50D	AS 2165	AS 2165 D
TURBOVAC 50	AS 2133	AS 2133 D
TURBOVAC SL 80	LAS 2368	LAS 2368 D
TURBOVAC TW 70 H	AS 2368	AS 2368 D
TURBOVAC 151	AS 2134	AS 2134 D
TURBOVAC TW 250 S	AS 2168	AS 2168 D
TURBOVAC SL 300	LAS 2369	LAS 2369 D
TURBOVAC TW 300	AS 2369	AS 2369 D
TURBOVAC 361	AS 2135	AS 2135 D
TURBOVAC 600 / 1000	AS 2136	AS 2136 D
TURBOVAC TW 701 / 690	AS 2330	AS 2330 D
TURBOVAC 1100	AS 2137	AS 2137 D

Services for Magnetically Levitated Turbomolecular Pumps

Complete Refurbishing at the Service Centre

Complete refurbishing at the service centre includes the following:
Complete disassembly, cleaning, replacement of all wearing parts, mounting, electrical safety test, final test including vibration measurement

Complete Refurbishing with Decontamination at the Service Centre

Complete refurbishing with decontamination at the service centre includes the following:
Complete disassembly, cleaning and decontamination, replacement of all wearing parts, mounting, electrical safety test, final test including vibration measurement

Ordering Information	Complete Refurbishing at the Service Centre	Complete Refurbishing with Decontamination at the Service Centre
	Part No.	**Part No.**
For pump		
MAG W 300 / 400	**AS 2300**	**AS 2300 D**
MAG W 600 / 700	**AS 2600**	**AS 2600 D**
MAG W 1300 iP (L) – 2201 iP (L)	**AS 2700**	**AS 2700 D**
MAG (W) 1600 / 2000	**AS 2164** [1]	**AS 2164 D** [1]
MAG (W) 830 / 1300 / 1500	**AS 2370** [1]	**AS 2370 D** [1]
MAG 900 / 1000 / 1200	**AS 2160** [1]	**AS 2160 D** [1]
MAG 2200	**AS 2200** [1]	**AS 2200 D** [1]
MAG 2800 / 3200	**AS 2800** [1]	**AS 2800 D** [1]

Notes

The listed services include the costs for material and working hours for standard pumps. Services for pump variants upon request.
If additional spare parts are needed for repairs, then these are invoiced separately according to a cost estimate.

[1] Including rotor replacement